2024 Z900RS ABS

PARTS DIAGRAM

Brake Pedal/Torque Link

F2260

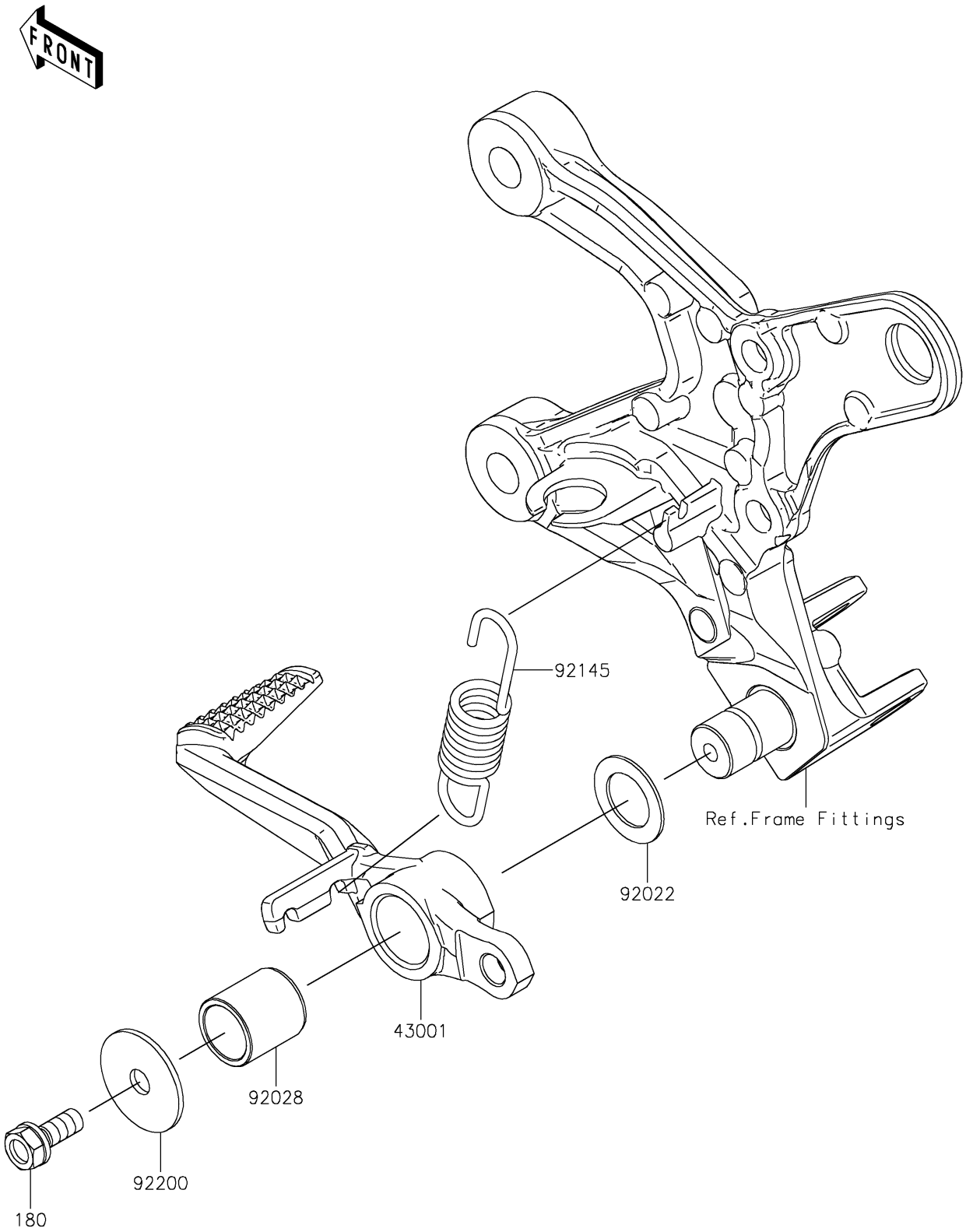

© 2026 Kawasaki Motors Corp., U.S.A.

2024 Z900RS ABS

PARTS LIST

Brake Pedal/Torque Link

ITEM NAME	PART NUMBER	QUANTITY

© 2026 Kawasaki Motors Corp., U.S.A.