2022 Z900RS

PARTS DIAGRAM

Crankshaft

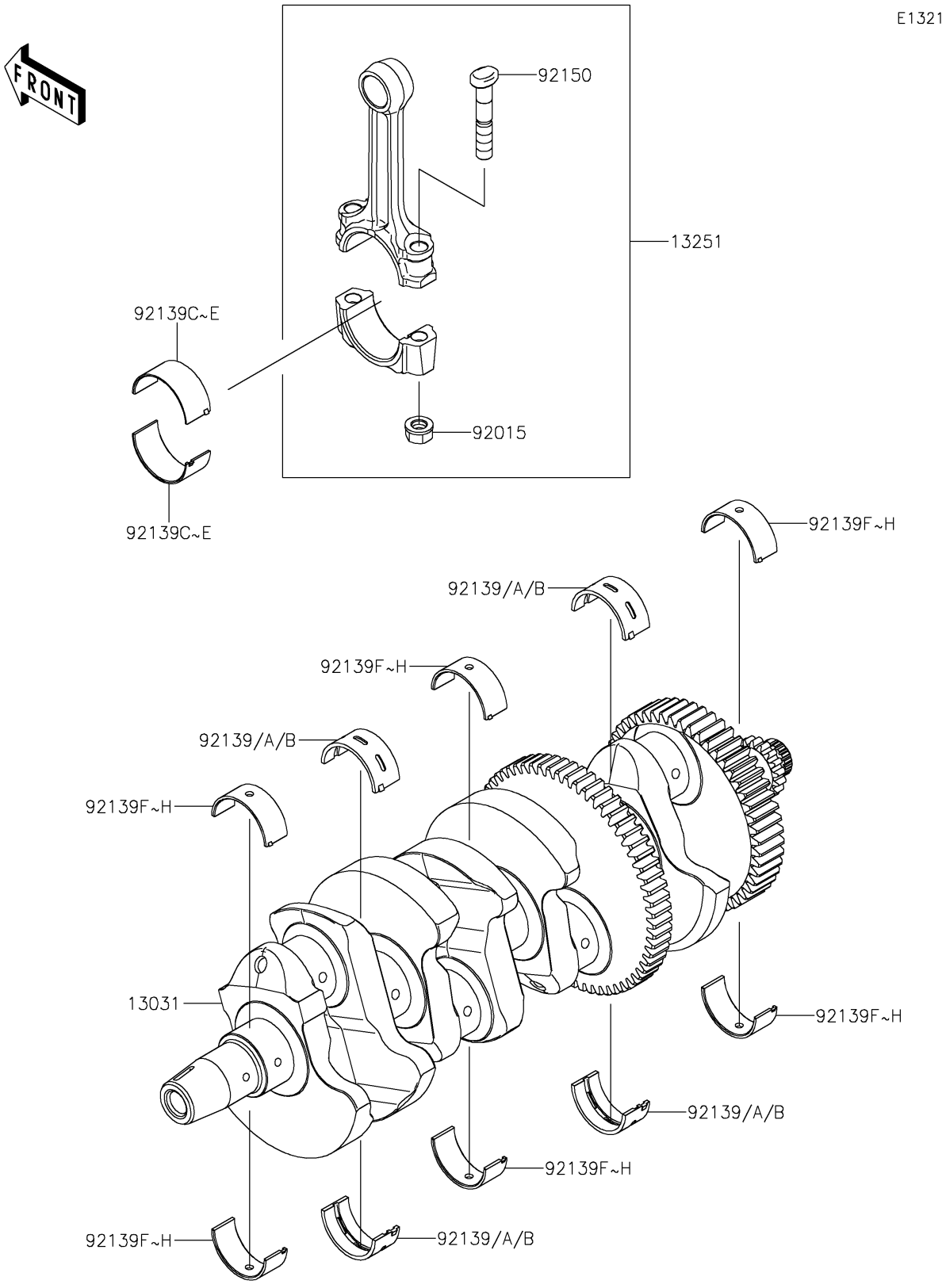

© 2026 Kawasaki Motors Corp., U.S.A.

2022 Z900RS

PARTS LIST

Crankshaft

ITEM NAME	PART NUMBER	QUANTITY

© 2026 Kawasaki Motors Corp., U.S.A.