2024 Z900RS ABS

PARTS DIAGRAM

Camshaft(s)/Tensioner

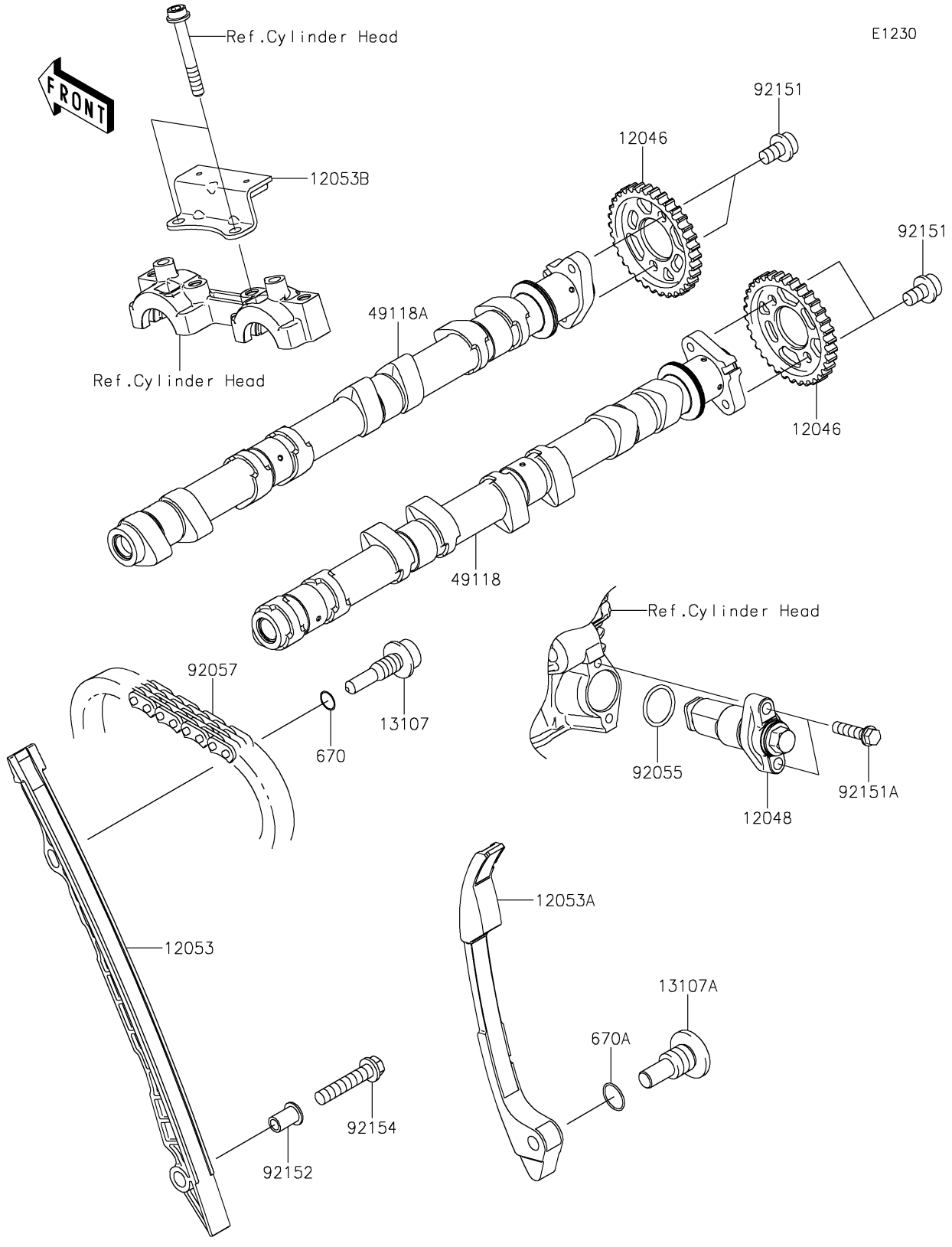

© 2026 Kawasaki Motors Corp., U.S.A.

2024 Z900RS ABS

PARTS LIST

Camshaft(s)/Tensioner

ITEM NAME	PART NUMBER	QUANTITY
SPROCKET,CAMSHAFT,34T (Ref # 12046)	12046-0564	2
TENSIONER-ASSY (Ref # 12048)	12048-0080	1
GUIDE-CHAIN,FR (Ref # 12053)	12053-0161	1
GUIDE-CHAIN,RR (Ref # 12053A)	12053-0162	1
GUIDE-CHAIN,UPP (Ref # 12053B)	12053-0163	1
SHAFT,CHAIN GUIDE (Ref # 13107)	13107-0157	1
SHAFT (Ref # 13107A)	13107-1376	1
CAMSHAFT-COMP,INTAKE (Ref # 49118)	49118-0910	1
CAMSHAFT-COMP,EXHAUST (Ref # 49118A)	49118-0920	1
RING-O,18.8X1.9 (Ref # 92055)	92055-086	1
CHAIN,98XRH2015-126M (Ref # 92057)	92057-0202	1
BOLT,SOCKET,6X10 (Ref # 92151)	92151-1829	4
BOLT,FLANGED-SMALL,6X25 (Ref # 92151A)	92151-1930	2
COLLAR (Ref # 92152)	92152-1167	1
BOLT,FLANGED,6X30 (Ref # 92154)	92154-1942	1
O RING,9MM (Ref # 670)	670D1509	1
O RING,14MM (Ref # 670A)	670D2014	1

© 2026 Kawasaki Motors Corp., U.S.A.