1996 Concours (Canada Only)

PARTS DIAGRAM

Headlight(s)

F2710

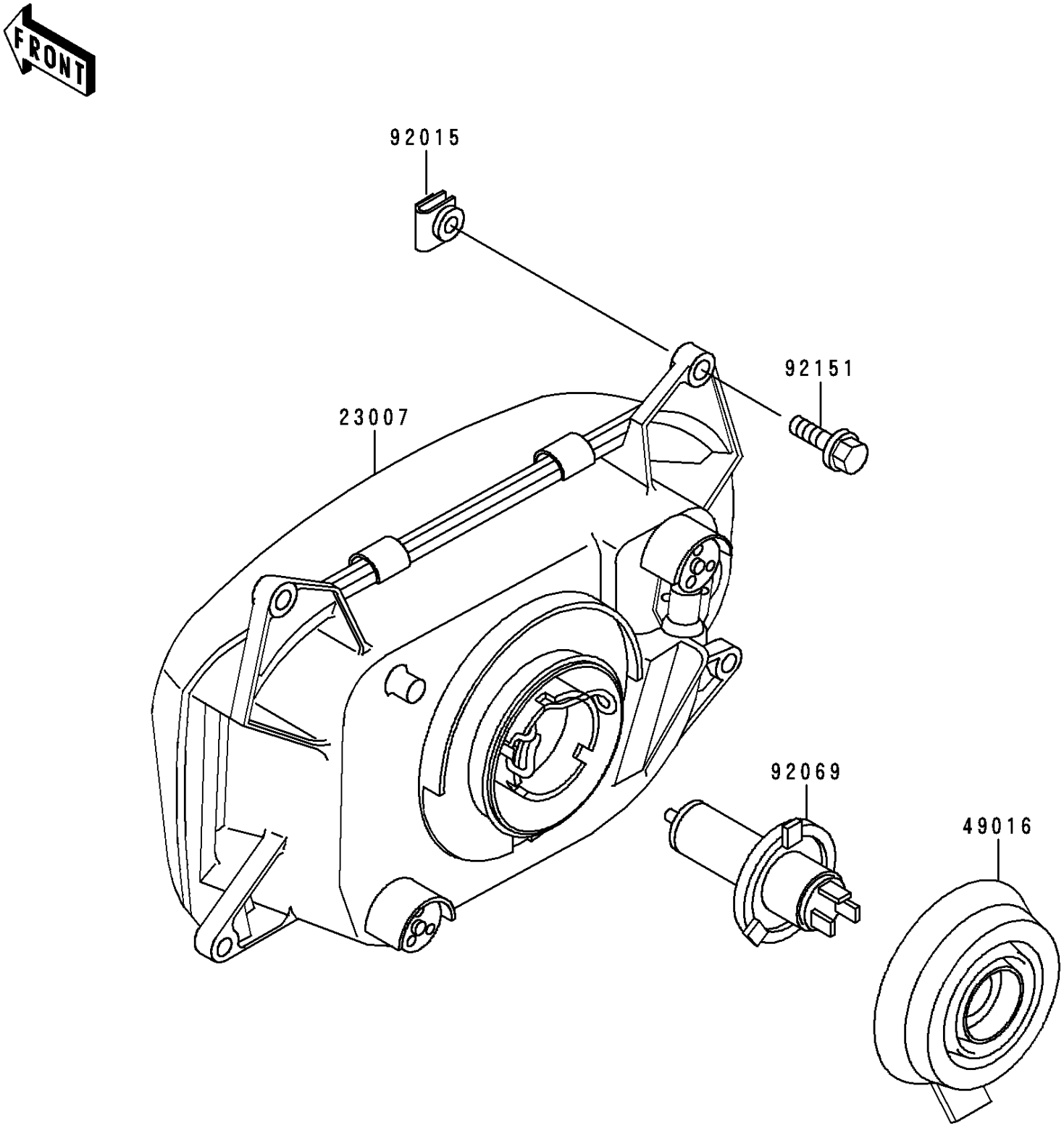

© 2026 Kawasaki Motors Corp., U.S.A.

1996 Concours (Canada Only)

PARTS LIST

Headlight(s)

ITEM NAME	PART NUMBER	QUANTITY
LENS-COMP,HEAD LAMP (Ref # 23007)	23007-1132	1
COVER-SEAL,HEAD LAMP (Ref # 49016)	49016-1108	1
NUT,6MM (Ref # 92015)	92015-1094	4
BULB,12V 60/55W,H4 (Ref # 92069)	92069-1002	1
BOLT,6X25 (Ref # 92151)	92151-1241	4

© 2026 Kawasaki Motors Corp., U.S.A.