# 1999 Concours

## PARTS DIAGRAM

### Meter(s)

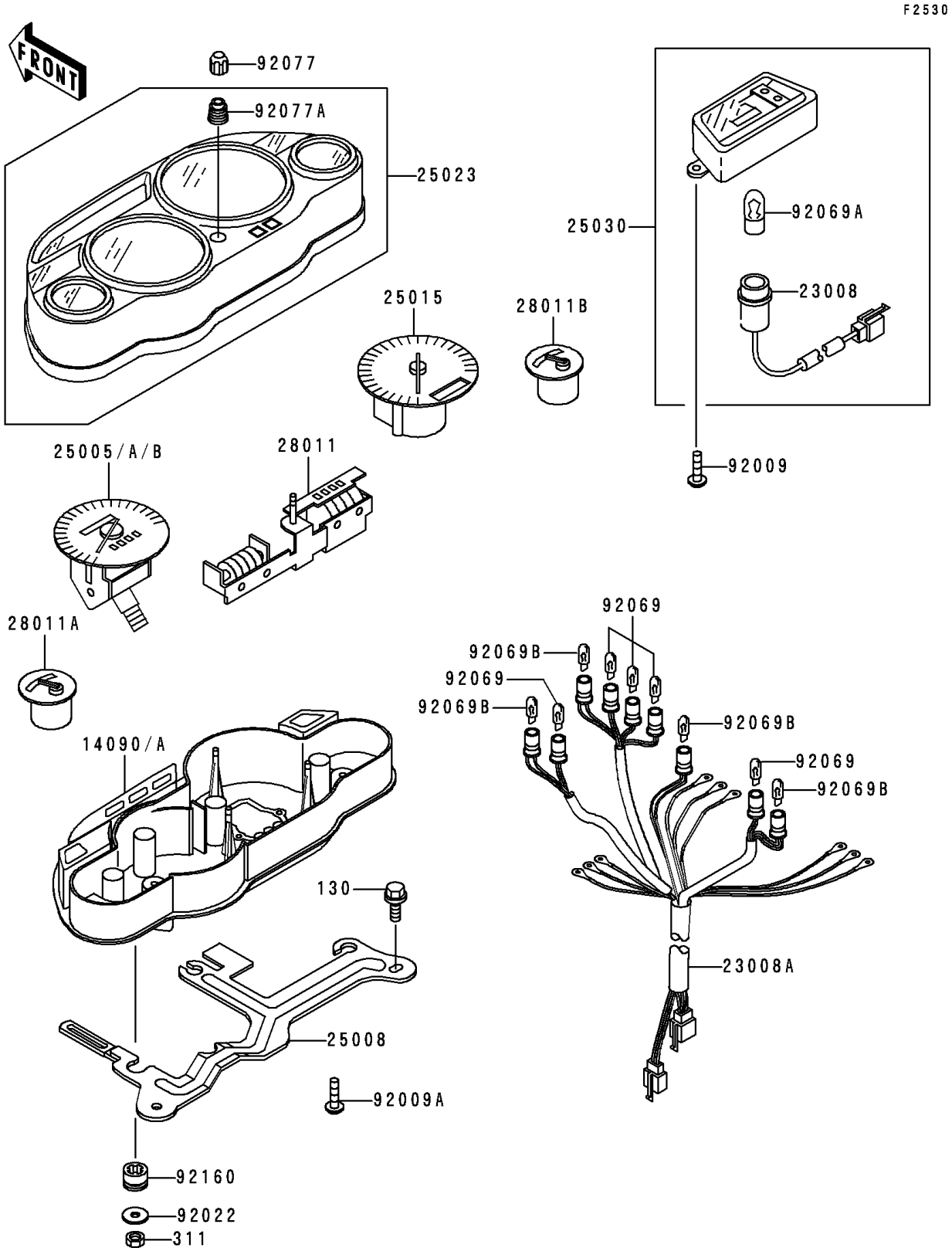


© 2026 Kawasaki Motors Corp., U.S.A.

# 1999 Concours

## PARTS LIST

Meter(s)

| ITEM NAME | PART NUMBER | QUANTITY |
|---|---|---|
| BOLT-FLANGED,6X14,BLACK (Ref # 130) | 130J0614 | 2 |
| NUT-HEX,6MM (Ref # 311) | 311B0600 | 3 |
| COVER,METER HOUSING (Ref # 14090A) | 14090-1287 | 1 |
| SOCKET-ASSY,DEGITAL CLOCK (Ref # 23008) | 23008-1529 | 1 |
| SOCKET-ASSY,METER (Ref # 23008A) | 23008-1534 | 1 |
| BRACKET-METER (Ref # 25008) | 25008-1199 | 1 |
| TACHOMETER,X1000R/MIN (Ref # 25015) | 25015-1329 | 1 |
| COVER-METER CASE,UPP (Ref # 25023) | 25023-1201 | 1 |
| CLOCK,DEGITAL (Ref # 25030) | 25030-1002 | 1 |
| METER,TRIP (Ref # 28011) | 28011-1130 | 1 |
| METER,FUEL (Ref # 28011A) | 28011-1145 | 1 |
| METER,TEMP (Ref # 28011B) | 28011-1146 | 1 |
| SCREW,TAPPING,4X16 (Ref # 92009) | 92009-1163 | 2 |
| SCREW,TAPPING,4X14 (Ref # 92009A) | 92009-1503 | 4 |
| WASHER,6.2X18X1.2 (Ref # 92022) | 92022-1369 | 3 |
| BULB,12V 3.4W (Ref # 92069) | 92069-1007 | 5 |
| BULB,12V3W T-7 (Ref # 92069A) | 92069-1020 | 1 |
| BULB,12V 1.7W (Ref # 92069B) | 92069-1059 | 4 |
| KNOB,TRIP RESET (Ref # 92077) | 92077-1094 | 1 |
| KNOB,TRIP RESET (Ref # 92077A) | 92077-1112 | 1 |
| DAMPER (Ref # 92160) | 92160-1461 | 3 |
| SPEEDOMETER,KPH (Ref # 25005A) | 25005-1558 | 1 |
| SPEEDOMETER,MPH (Ref # 25005B) | 25005-1559 | 1 |

© 2026 Kawasaki Motors Corp., U.S.A.