1995 Concours

PARTS DIAGRAM

Front Wheel

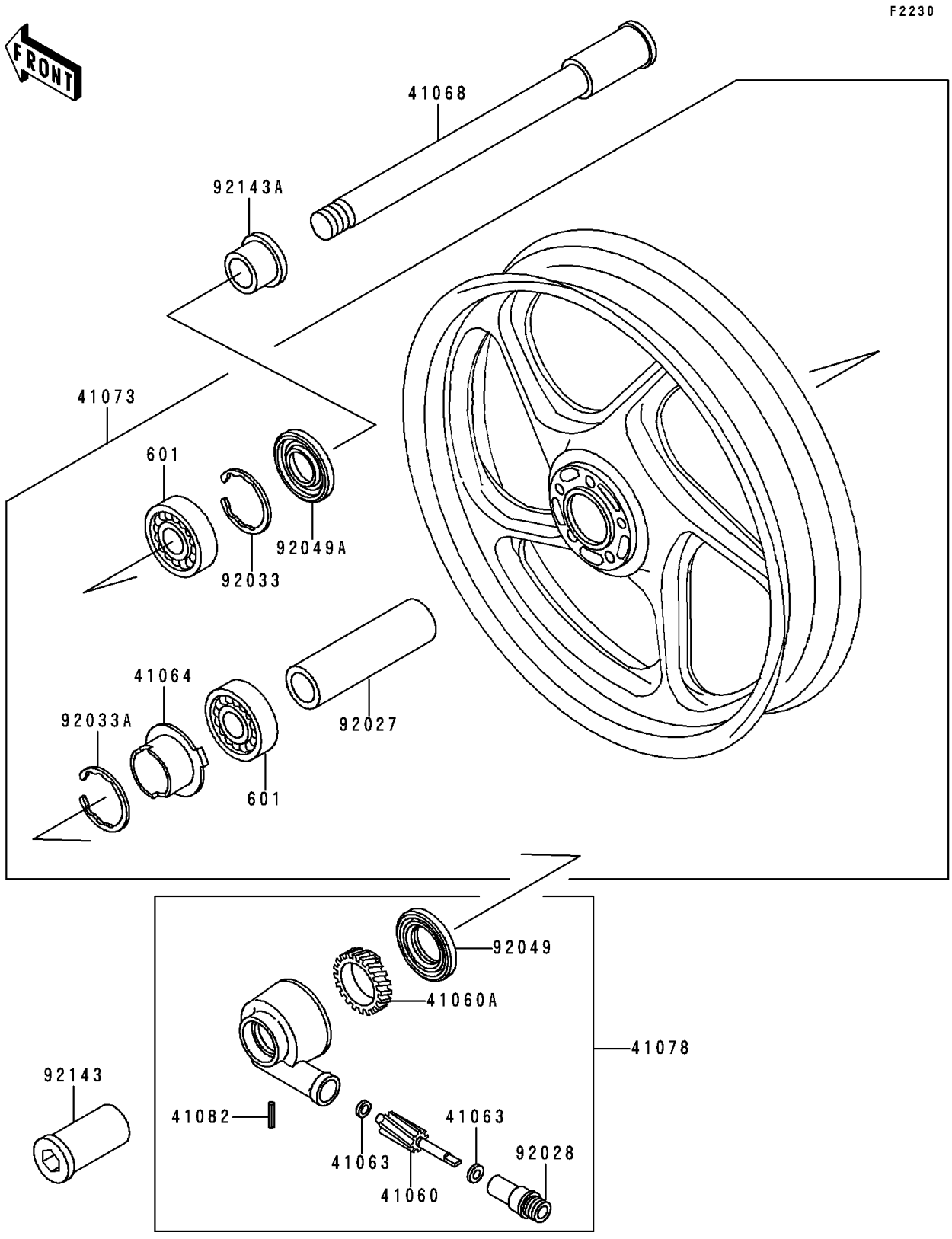

© 2026 Kawasaki Motors Corp., U.S.A.

1995 Concours

PARTS LIST

Front Wheel

ITEM NAME	PART NUMBER	QUANTITY
BEARING-BALL,#6203UUC3 (Ref # 601)	601B6203UU	2
GEAR-METER SCREW,9T (Ref # 41060)	41060-1123	1
GEAR-METER SCREW,25T (Ref # 41060A)	41060-1151	1
WASHER,5.1X9X0.4 (Ref # 41063)	41063-001	2
RECEIVER-SPEEDOMETER (Ref # 41064)	41064-1006	1
AXLE,FR (Ref # 41068)	41068-1255	1
WHEEL-ASSY,FR,G.GRAY (Ref # 41073)	41073-1545-GE	1
CASE-ASSY-METER GEAR (Ref # 41078)	41078-1101	1
PIN,SPRING (Ref # 41082)	41082-001	1
COLLAR,17X25X92 (Ref # 92027)	92027-1545	1
BUSHING,SPEEDOMETER (Ref # 92028)	92028-1066	1
RING-SNAP,40MM (Ref # 92033)	92033-1040	1
RING-SNAP,42MM (Ref # 92033A)	92033-1041	1
SEAL-OIL,BJN30427-C3 (Ref # 92049)	92049-1057	1
SEAL-OIL,AG1258AO (Ref # 92049A)	92049-1110	1
COLLAR,FR AXLE,NUT,L=42.5 (Ref # 92143)	92143-1206	1
COLLAR,FR AXLE,L=15 (Ref # 92143A)	92143-1578	1

© 2026 Kawasaki Motors Corp., U.S.A.