1995 Concours

PARTS DIAGRAM

Stand(s)

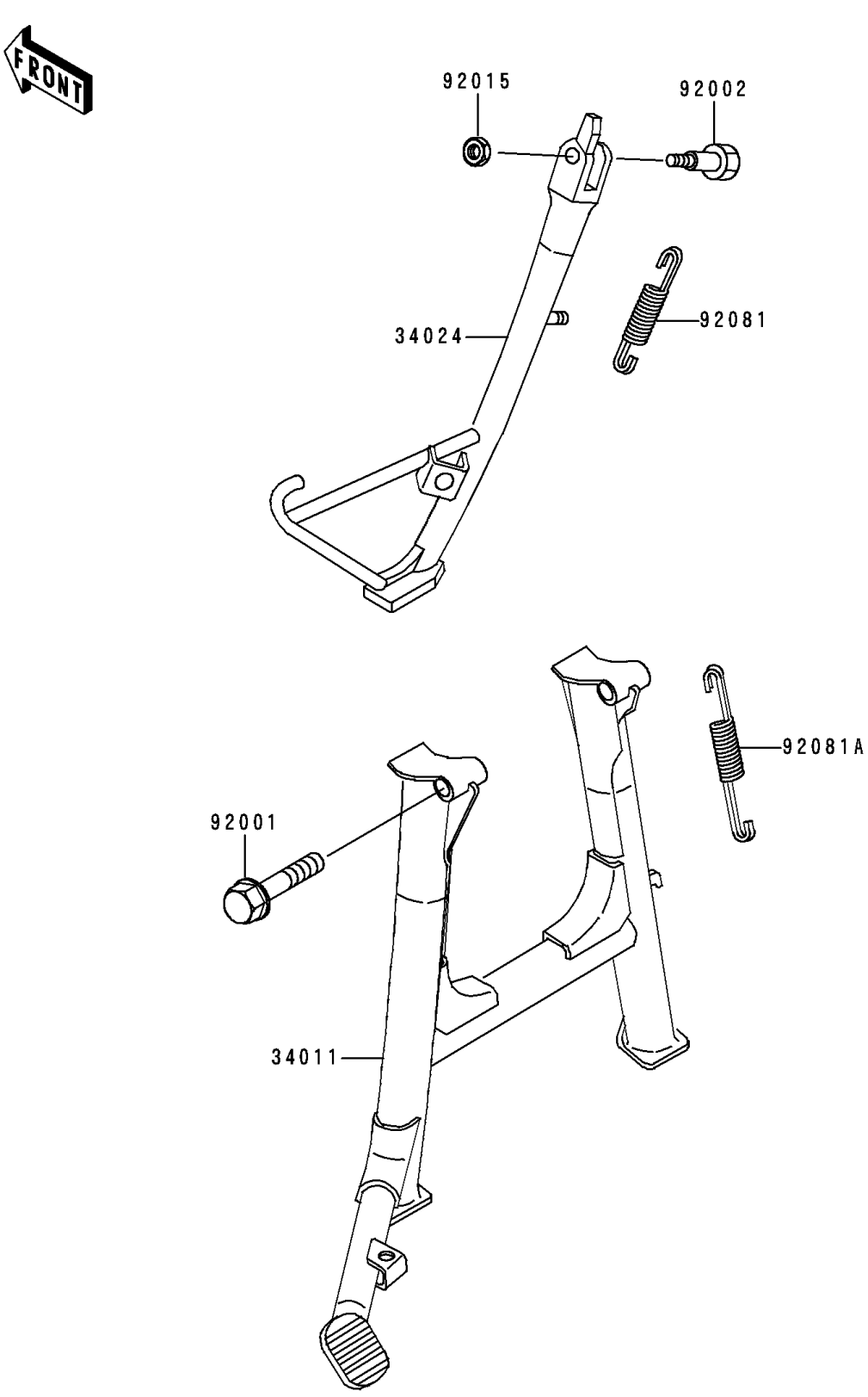

© 2026 Kawasaki Motors Corp., U.S.A.

1995 Concours

PARTS LIST

Stand(s)

ITEM NAME	PART NUMBER	QUANTITY
STAND-CENTER (Ref # 34011)	34011-1134	1
STAND-SIDE (Ref # 34024)	34024-1208	1
BOLT,CENTER STAND (Ref # 92001)	92001-1880	2
BOLT,SIDE STAND (Ref # 92002)	92002-1813	1
NUT,LOCK,10MM,BLACK (Ref # 92015)	92015-1188	1
SPRING,SIDE STAND (Ref # 92081)	92081-1676	1
SPRING,CENTER STAND (Ref # 92081A)	92081-1828	1

© 2026 Kawasaki Motors Corp., U.S.A.