1995 Concours

PARTS DIAGRAM

Starter Motor

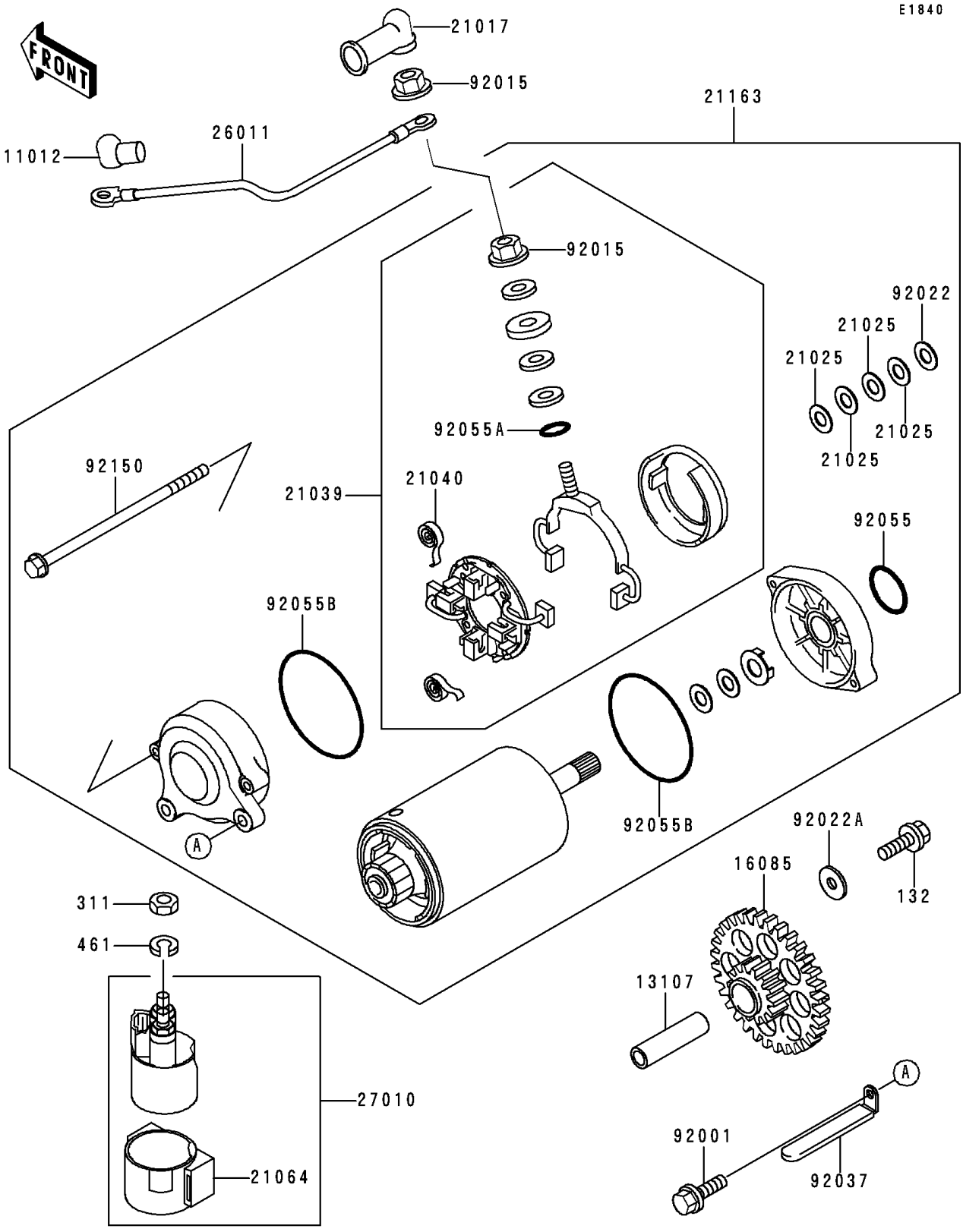

© 2026 Kawasaki Motors Corp., U.S.A.

1995 Concours

PARTS LIST

Starter Motor

ITEM NAME	PART NUMBER	QUANTITY
BOLT-FLANGED-SMALL (Ref # 132)	132G0612	1
NUT-HEX,6MM (Ref # 311)	311B0600	2
WASHER-SPRING,6MM (Ref # 461)	461F0600	2
CAP,TERMINAL (Ref # 11012)	11012-1354	1
SHAFT,IDLE GEAR (Ref # 13107)	13107-1106	1
GEAR,IDLE (Ref # 16085)	16085-1104	1
GROMMET,STARTER TERMINAL (Ref # 21017)	21017-017	1
WASHER,9.1X18X0.2 (Ref # 21025)	21025-011	4
BRUSH,CARBON (Ref # 21039)	21039-1060	1
SPRING-BRUSH (Ref # 21040)	21040-1055	4
DAMPER,MAGNETIC SWITCH (Ref # 21064)	21064-002	1
STARTER-ELECTRIC (Ref # 21163)	21163-1161	1
WIRE-LEAD,MOTOR (Ref # 26011)	26011-1316	1
SWITCH,MAGNETIC (Ref # 27010)	27010-1235	1
BOLT,6X20 (Ref # 92001)	92001-1947	2
NUT,STARTER MOTOR (Ref # 92015)	92015-1476	2
WASHER,9.1X18X0.8 (Ref # 92022)	92022-1132	1
WASHER,6X19.5X2 (Ref # 92022A)	92022-1517	1
CLAMP (Ref # 92037)	92037-1679	1
RING-O (Ref # 92055)	92055-1276	1
RING-O,4.5X2.0 (Ref # 92055A)	92055-1370	1
RING-O,STARTER MOTOR (Ref # 92055B)	92055-1381	2
BOLT,5X110 (Ref # 92150)	92150-1143	2

© 2026 Kawasaki Motors Corp., U.S.A.