1999 Concours

PARTS DIAGRAM

Ignition System

Kawasaki
Let the Good Times Roll®

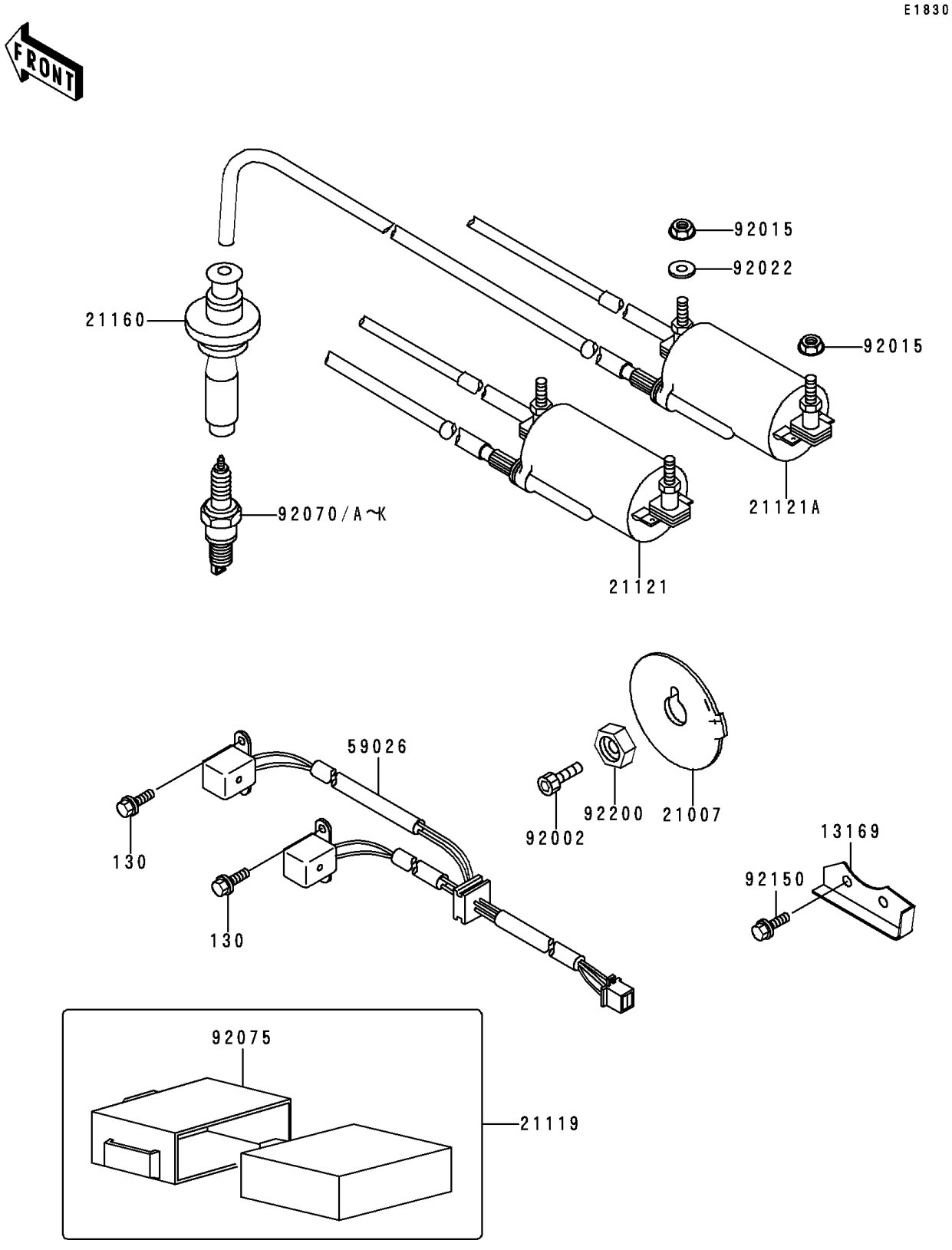

© 2026 Kawasaki Motors Corp., U.S.A.

1999 Concours

PARTS LIST

Ignition System

ITEM NAME	PART NUMBER	QUANTITY
PLATE,CHAIN GUIDE (Ref # 13169)	13169-1748	1
ROTOR,PULSING COIL (Ref # 21007)	21007-1109	1
IGNITER (Ref # 21119)	21119-1110	1
COIL-IGNITION,#1&#4 (Ref # 21121)	21121-1110	1
COIL-IGNITION,#2&#3 (Ref # 21121A)	21121-1111	1
CAP-ASSY-PLUG (Ref # 21160)	21160-1065	4
COIL-PULSING (Ref # 59026)	59026-1061	1
BOLT,SOCKET,8X25 (Ref # 92002)	92002-1442	1
NUT,FLANGED,6MM (Ref # 92015)	92015-1193	4
WASHER,7X16X1.2 (Ref # 92022)	92022-024	2
PLUG-SPARK,X24ESR-U(ND) (Ref # 92070)		4
PLUG-SPARK,X27ESR-U(ND) (Ref # 92070G)		4
PLUG-SPARK,X22ESR-U(ND) (Ref # 92070H)		4
PLUG-SPARK,DR7EA(NGK) (Ref # 92070I)	92070-1165	4
BOLT-FLANGED (Ref # 130)	130G0512	4
PLUG-SPARK,DR9EA(NGK) (Ref # 92070J)	92070-1189	4
PLUG-SPARK,DR8EA(NGK) (Ref # 92070K)	92070-1199	4
DAMPER,IGNITER (Ref # 92075)	92075-1592	1
BOLT,6X12 (Ref # 92150)	92150-1841	2
WASHER,ROTOR (Ref # 92200)	92200-1173	1

© 2026 Kawasaki Motors Corp., U.S.A.