1999 Concours

PARTS DIAGRAM

Breather Cover/Oil Pan

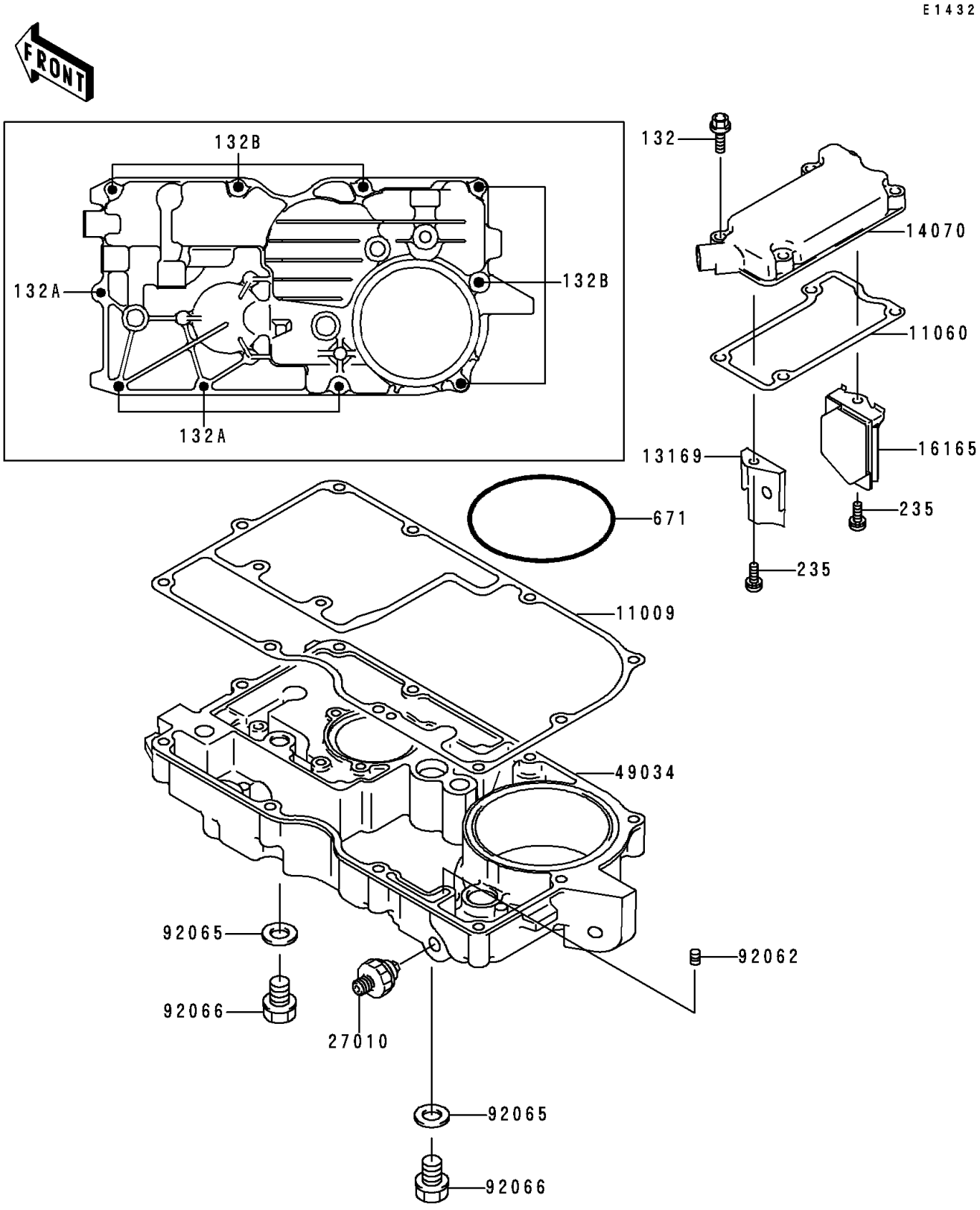

© 2026 Kawasaki Motors Corp., U.S.A.

1999 Concours

PARTS LIST

Breather Cover/Oil Pan

ITEM NAME	PART NUMBER	QUANTITY
BOLT-FLANGED-SMALL (Ref # 132)	132E0625	4
BOLT-FLANGED-SMALL (Ref # 132A)	132J0625	4
BOLT-FLANGED-SMALL,6X40 (Ref # 132B)	132J0640	6
SCREW-PAN-WP-CROS (Ref # 235)	235B0610	2
O RING,90MM (Ref # 671)	671B2590	1
GASKET,OIL PAN (Ref # 11009)	11009-1981	1
GASKET,BREATHER BODY (Ref # 11060)	11060-1339	1
PLATE,BREATHER (Ref # 13169)	13169-1967	1
BODY-BREATHER (Ref # 14070)	14070-1084	1
SEPARATOR,OIL (Ref # 16165)	16165-1053	1
SWITCH,OIL PRESSURE (Ref # 27010)	27010-1313	1
PAN-OIL (Ref # 49034)	49034-1065	1
NOZZLE,6X8,YELLOW (Ref # 92062)	92062-1080	1
GASKET,12X22X2,DRAIN PLUG (Ref # 92065)	92065-097	2
PLUG,OIL DRAIN,12X15 (Ref # 92066)	92066-1174	2

© 2026 Kawasaki Motors Corp., U.S.A.