# 1996 Concours (Canada Only)

## PARTS DIAGRAM

### Engine Cover(s)

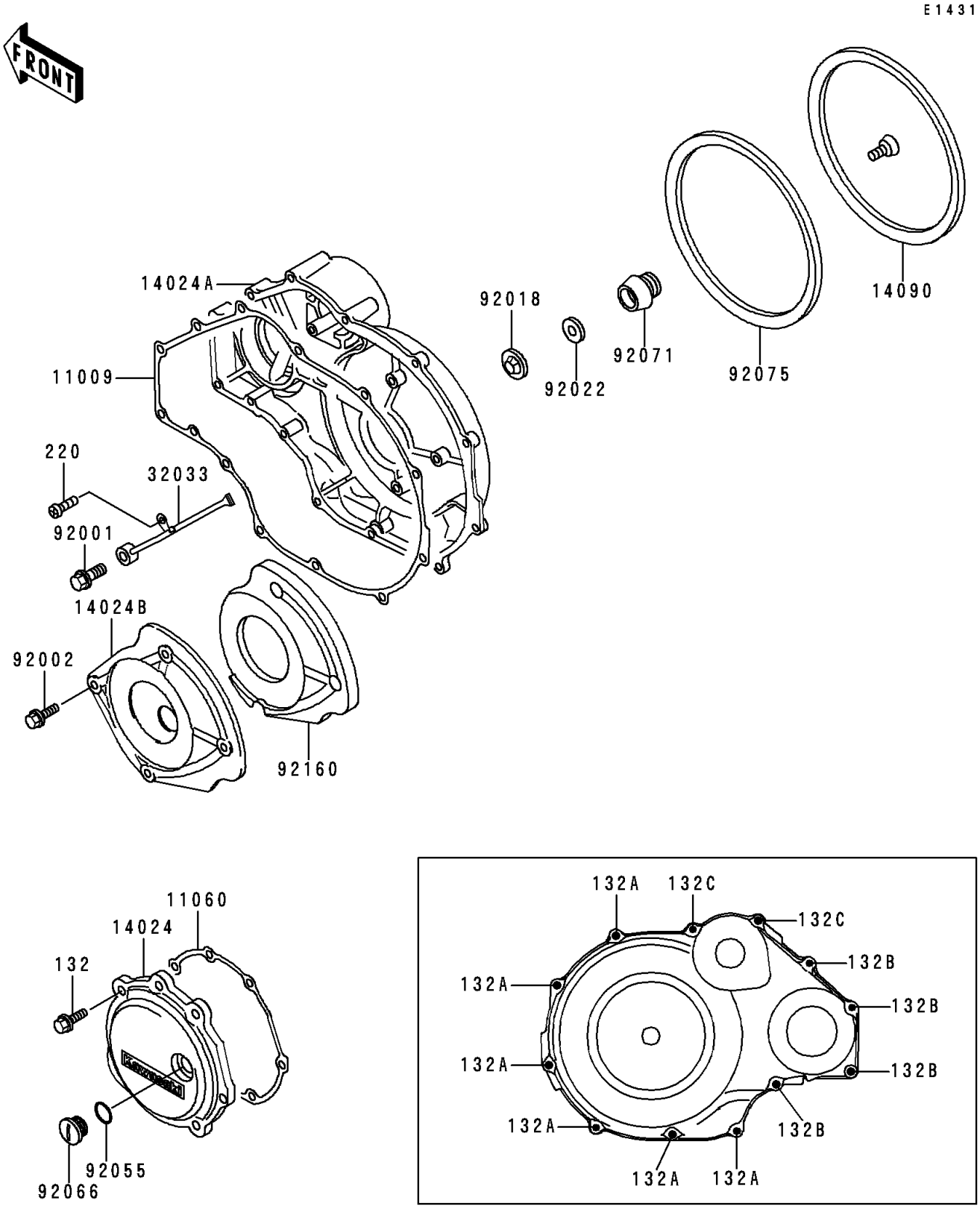


© 2026 Kawasaki Motors Corp., U.S.A.

# 1996 Concours (Canada Only)

## PARTS LIST

### Engine Cover(s)

| ITEM NAME | PART NUMBER | QUANTITY |
|---|---|---|
| BOLT-FLANGED-SMALL (Ref # 132) | 132J0620 | 7 |
| BOLT-FLANGED-SMALL (Ref # 132A) | 132J0625 | 6 |
| BOLT-FLANGED-SMALL,6X40 (Ref # 132B) | 132J0640 | 4 |
| BOLT-FLANGED-SMALL,6X55 (Ref # 132C) | 132J0655 | 2 |
| SCREW-PAN-CROS (Ref # 220) | 220B0510 | 1 |
| GASKET,CLUTCH COVER (Ref # 11009) | 11009-1860 | 1 |
| GASKET,PULSING COVER (Ref # 11060) | 11060-1695 | 1 |
| COVER,LH (Ref # 14024) | 14024-1066 | 1 |
| COVER,CLUTCH (Ref # 14024A) | 14024-1067 | 1 |
| COVER,SOUND ARRESTER (Ref # 14024B) | 14024-1925 | 1 |
| COVER,CLUTCH COVER (Ref # 14090) | 14090-1409 | 1 |
| PIPE,CLUTCH COVER (Ref # 32033) | 32033-1204 | 1 |
| BOLT,BANJO,8X20 (Ref # 92001) | 92001-1855 | 1 |
| BOLT,6X10 (Ref # 92002) | 92002-1541 | 4 |
| NUT,SPEED,5MM (Ref # 92018) | 92018-004 | 1 |
| WASHER,5.5X20X1.2 (Ref # 92022) | 92022-104 | 1 |
| RING-O (Ref # 92055) | 92055-1146 | 1 |
| PLUG (Ref # 92066) | 92066-1397 | 1 |
| GROMMET,CLUTCH COVER (Ref # 92071) | 92071-1108 | 1 |
| DAMPER,CLUTCH COVER (Ref # 92075) | 92075-1594 | 1 |
| DAMPER,SOUND ARRESTER (Ref # 92160) | 92160-1209 | 1 |

© 2026 Kawasaki Motors Corp., U.S.A.