1999 Concours

PARTS DIAGRAM

Crankcase

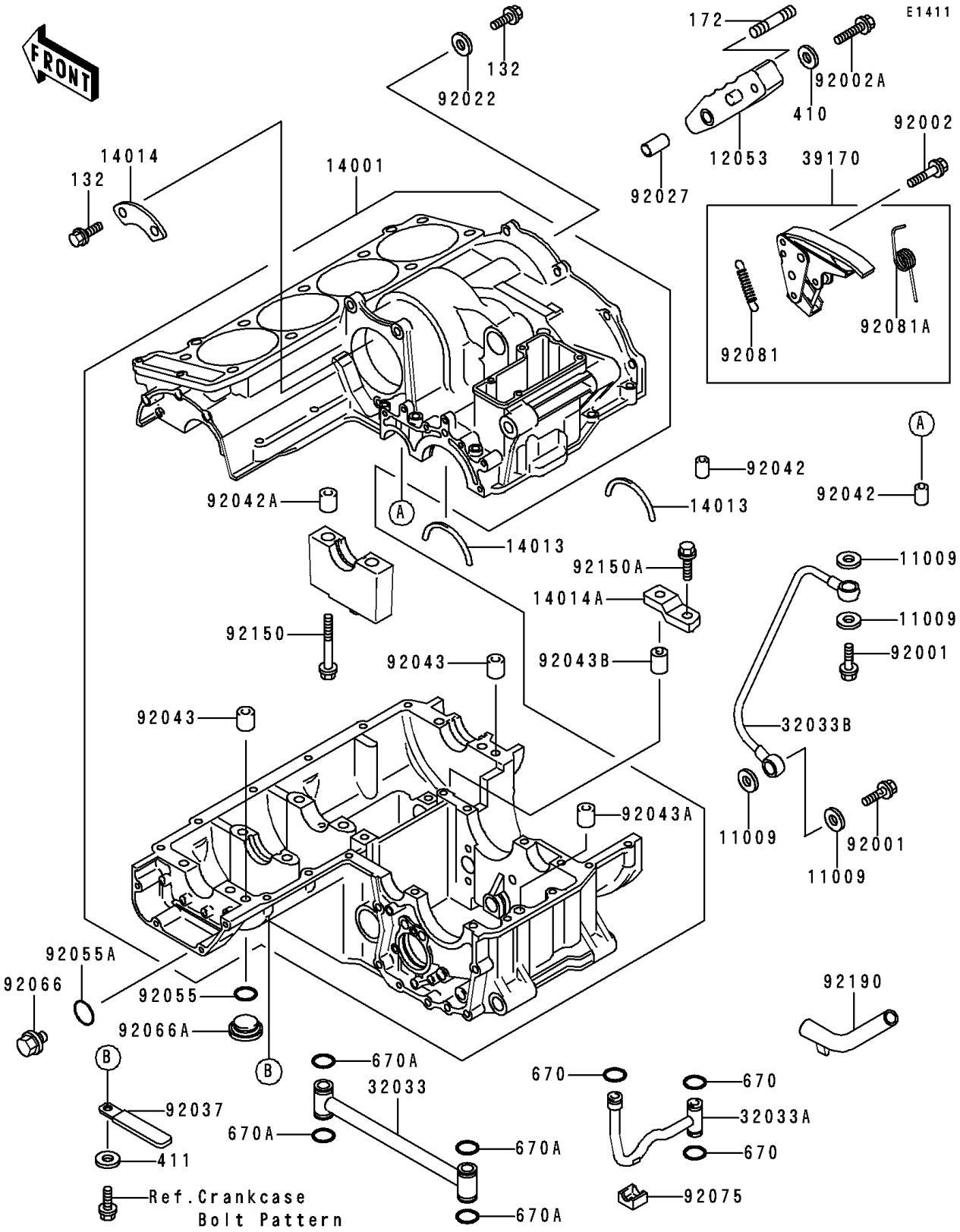

© 2026 Kawasaki Motors Corp., U.S.A.

1999 Concours

PARTS LIST

Crankcase

ITEM NAME	PART NUMBER	QUANTITY
BOLT-FLANGED-SMALL (Ref # 132)	132G0612	3
BOLT-STUD,6X16 (Ref # 172)	172G0616	1
WASHER-PLAIN-SMALL,6MM (Ref # 410)	410B0600	1
WASHER-PLAIN,6MM,BLACK (Ref # 411)	411F0600	1
O RING,9MM (Ref # 670)	670D1509	3
O RING,16MM (Ref # 670A)	670D2016	4
GASKET,12.4X17X1.5 (Ref # 11009)	11009-1376	4
GUIDE-CHAIN (Ref # 12053)	12053-1189	1
SET-CRANKCASE (Ref # 14001)	14001-1075	1
RING-POSITION,T=1.98 (Ref # 14013)	14013-1005	2
PLATE-POSITION (Ref # 14014)	14014-1056	1
PLATE-POSITION,BALANCER PIN (Ref # 14014A)	14014-1067	1
PIPE,MAIN GALLARY (Ref # 32033)	32033-1201	1
PIPE (Ref # 32033A)	32033-1202	1
PIPE (Ref # 32033B)	32033-1961	1
TENSIONER-COMP (Ref # 39170)	39170-1055	1
BOLT,BANJO,12X23 (Ref # 92001)	92001-1871	2
BOLT,6X30 (Ref # 92002)	92002-1534	2
BOLT,6X25 (Ref # 92002A)	92002-1609	1
WASHER,6X19.5X2 (Ref # 92022)	92022-1517	1
COLLAR,6.2X8.1X15 (Ref # 92027)	92027-1079	1
CLAMP,L=45 (Ref # 92037)	92037-1539	1
PIN,DOWEL,6X16 (Ref # 92042)	92042-016	2
PIN,DOWEL,12X14 (Ref # 92042A)	92042-031	4
PIN,DOWEL,10X14 (Ref # 92043)	92043-1037	4
PIN,11.5X14X14 (Ref # 92043A)	92043-1279	1
PIN,BALANCER (Ref # 92043B)	92043-1281	1
RING-O,25.7X2.4 (Ref # 92055)	92055-1136	1
RING-O (Ref # 92055A)	92055-1146	1

© 2026 Kawasaki Motors Corp., U.S.A.

1999 Concours

PARTS LIST

Crankcase

ITEM NAME	PART NUMBER	QUANTITY
PLUG,MAIN GALLERY,18X9,BLACK (Ref # 92066)	92066-1096	1
PLUG,25X8 (Ref # 92066A)	92066-1161	1
DAMPER,PIPE (Ref # 92075)	92075-1785	1
SPRING (Ref # 92081)	92081-1668	1
SPRING (Ref # 92081A)	92081-1971	1
BOLT,9X90 (Ref # 92150)	92150-1364	2
BOLT,6X12 (Ref # 92150A)	92150-1868	1
TUBE (Ref # 92190)	92190-1075	1

© 2026 Kawasaki Motors Corp., U.S.A.