1999 Concours

PARTS DIAGRAM

Gear Change Mechanism

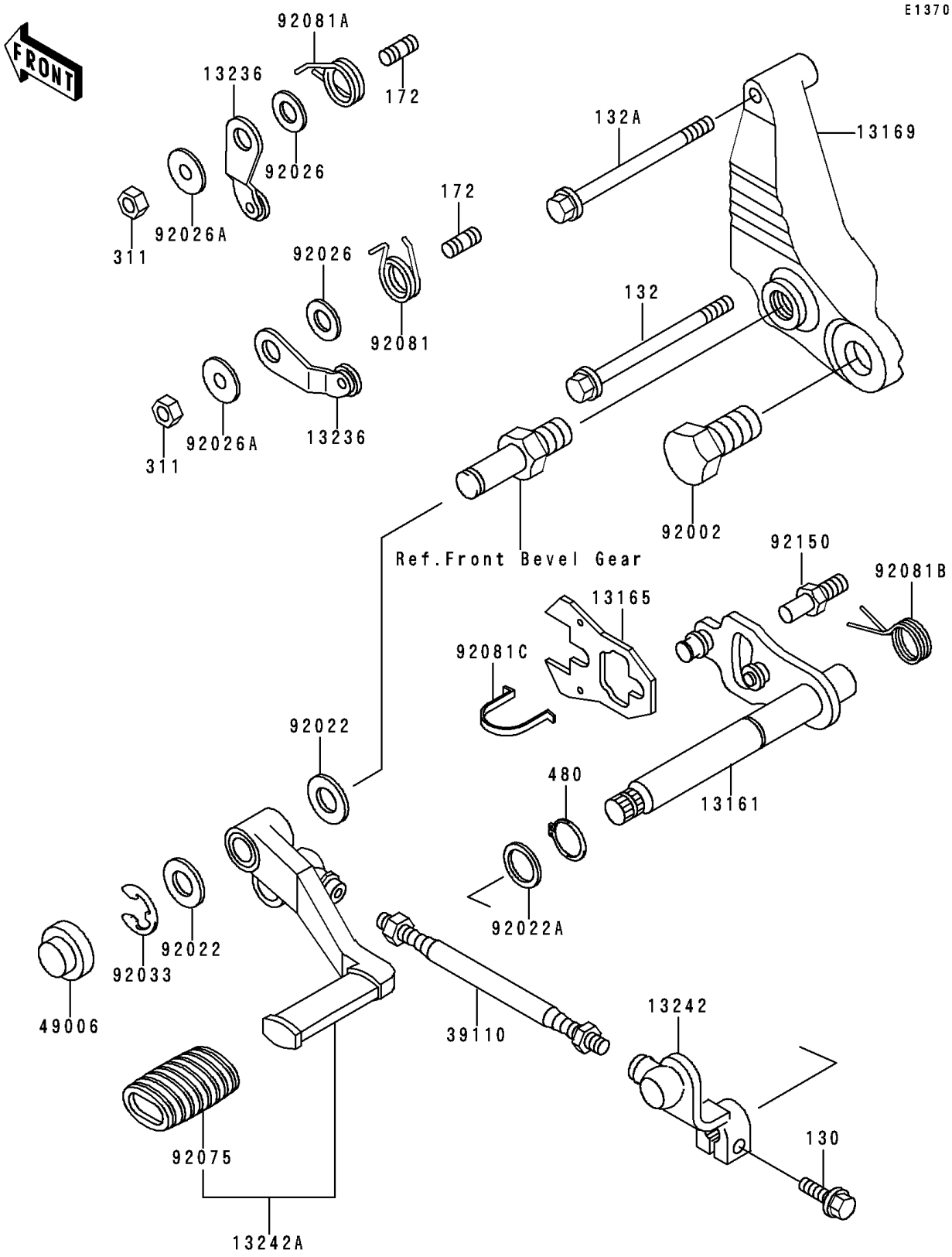

© 2026 Kawasaki Motors Corp., U.S.A.

1999 Concours

PARTS LIST

Gear Change Mechanism

ITEM NAME	PART NUMBER	QUANTITY
BOLT-FLANGED,6X20,BLACK (Ref # 130)	130S0620	1
BOLT-FLANGED-SMALL (Ref # 132)	132J0660	1
BOLT-FLANGED-SMALL (Ref # 132A)	132J0670	1
BOLT-STUD,6X14 (Ref # 172)	172G0614	2
NUT-HEX,6MM (Ref # 311)	311G0600	2
CIRCLIP-TYPE-C,13MM (Ref # 480)	480J1300	1
LEVER-COMP-CHANGE SHAFT (Ref # 13161)	13161-1123	1
PAWL (Ref # 13165)	13165-1120	1
PLATE,CHANGE PEDAL (Ref # 13169)	13169-1663	1
LEVER-COMP,GEAR POSITION (Ref # 13236)	13236-1103	2
LEVER-ASSY-CHANGE (Ref # 13242)	13242-1195	1
LEVER-ASSY-CHANGE,PEDAL (Ref # 13242A)	13242-1213	1
ROD-ASSY-TIE,CHANGE PEDAL (Ref # 39110)	39110-1071	1
BOOT,CHANGE LEVER (Ref # 49006)	49006-1061	1
BOLT (Ref # 92002)	92002-1816	1
WASHER,12.5X22X1.2 (Ref # 92022)	92022-1593	2
WASHER,13.3X18X1 (Ref # 92022A)	92022-1772	1
SPACER,6.3X12X1.0 (Ref # 92026)	92026-094	2
SPACER (Ref # 92026A)	92026-1217	2
RING-SNAP,TYPE-E,10MM (Ref # 92033)	92033-1178	1
DAMPER,CHANGE PEDAL (Ref # 92075)	92075-1175	1
SPRING (Ref # 92081)	92081-1645	1
SPRING (Ref # 92081A)	92081-1742	1
SPRING,CHANGE PEDAL RETURN (Ref # 92081B)	92081-1750	1
SPRING,CHANGE LEVER (Ref # 92081C)	92081-1829	1
BOLT,RETURN SPRING (Ref # 92150)	92150-1869	1

© 2026 Kawasaki Motors Corp., U.S.A.