1995 Concours

PARTS DIAGRAM

Gear Change Drum/Shift Fork(s)

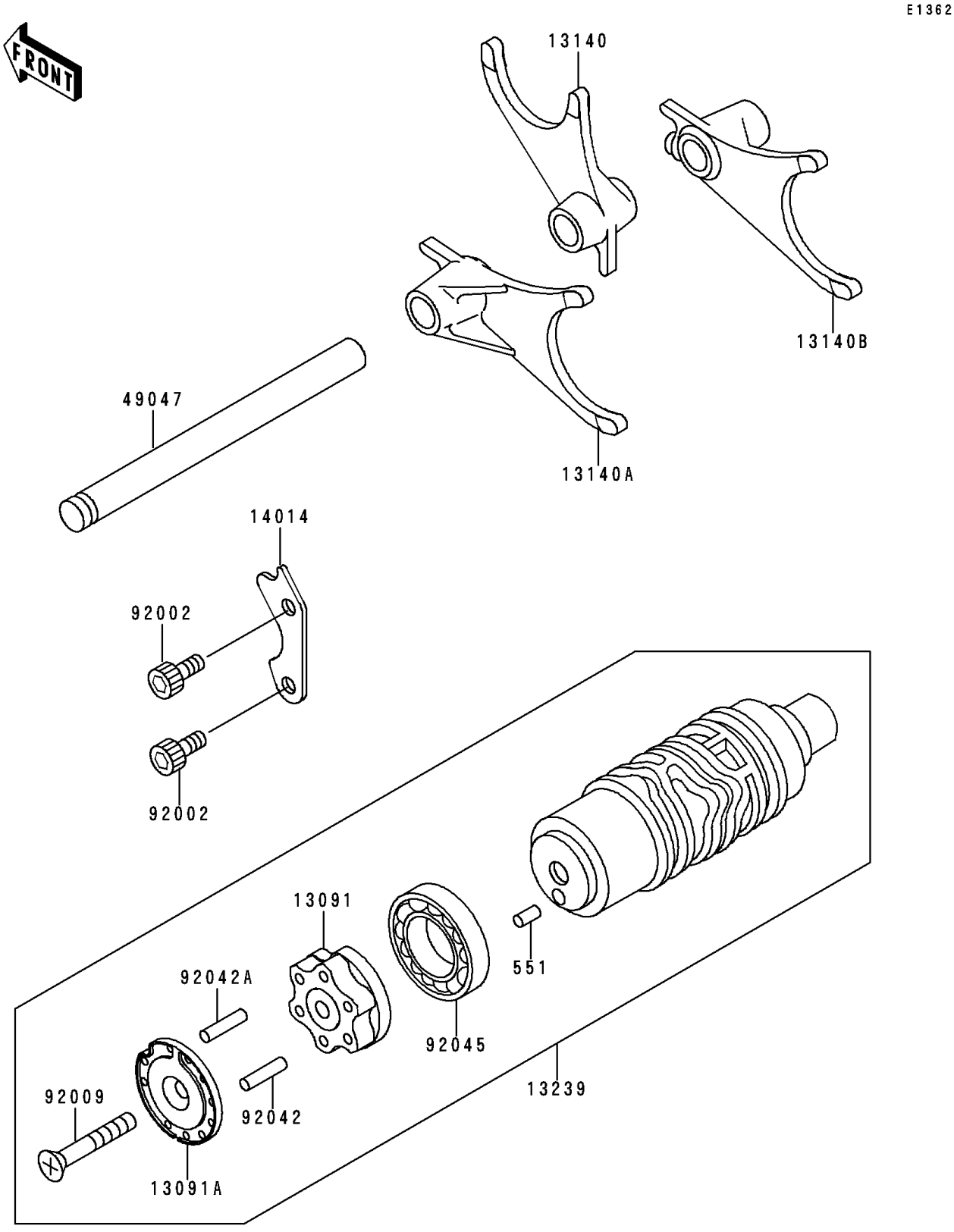

© 2026 Kawasaki Motors Corp., U.S.A.

1995 Concours

PARTS LIST

Gear Change Drum/Shift Fork(s)

ITEM NAME	PART NUMBER	QUANTITY
PIN-DOWEL,4X8 (Ref # 551)	551A0408	1
HOLDER,CHANGE DRUM (Ref # 13091)	13091-1275	1
HOLDER,NEUTRAL (Ref # 13091A)	13091-1334	1
FORK-SHIFT (Ref # 13140)	13140-1196	1
FORK-SHIFT (Ref # 13140A)	13140-1197	1
FORK-SHIFT (Ref # 13140B)	13140-1209	1
DRUM-ASSY-CHANGE (Ref # 13239)	13239-1122	1
PLATE-POSITION,CHANGE DRUM (Ref # 14014)	14014-1059	1
ROD-SHIFT (Ref # 49047)	49047-1055	1
BOLT,SOCKET,6X16 (Ref # 92002)	92002-1778	2
SCREW,6X45 (Ref # 92009)	92009-1599	1
PIN,DOWEL,4X15.8 (Ref # 92042)	92042-014	5
PIN,DOWEL,4X17.8 (Ref # 92042A)	92042-020	1
BEARING-BALL,16005(NTN) (Ref # 92045)	92045-1045	1

© 2026 Kawasaki Motors Corp., U.S.A.