2003 Vulcan 800 Classic

PARTS DIAGRAM

Gasket Kit

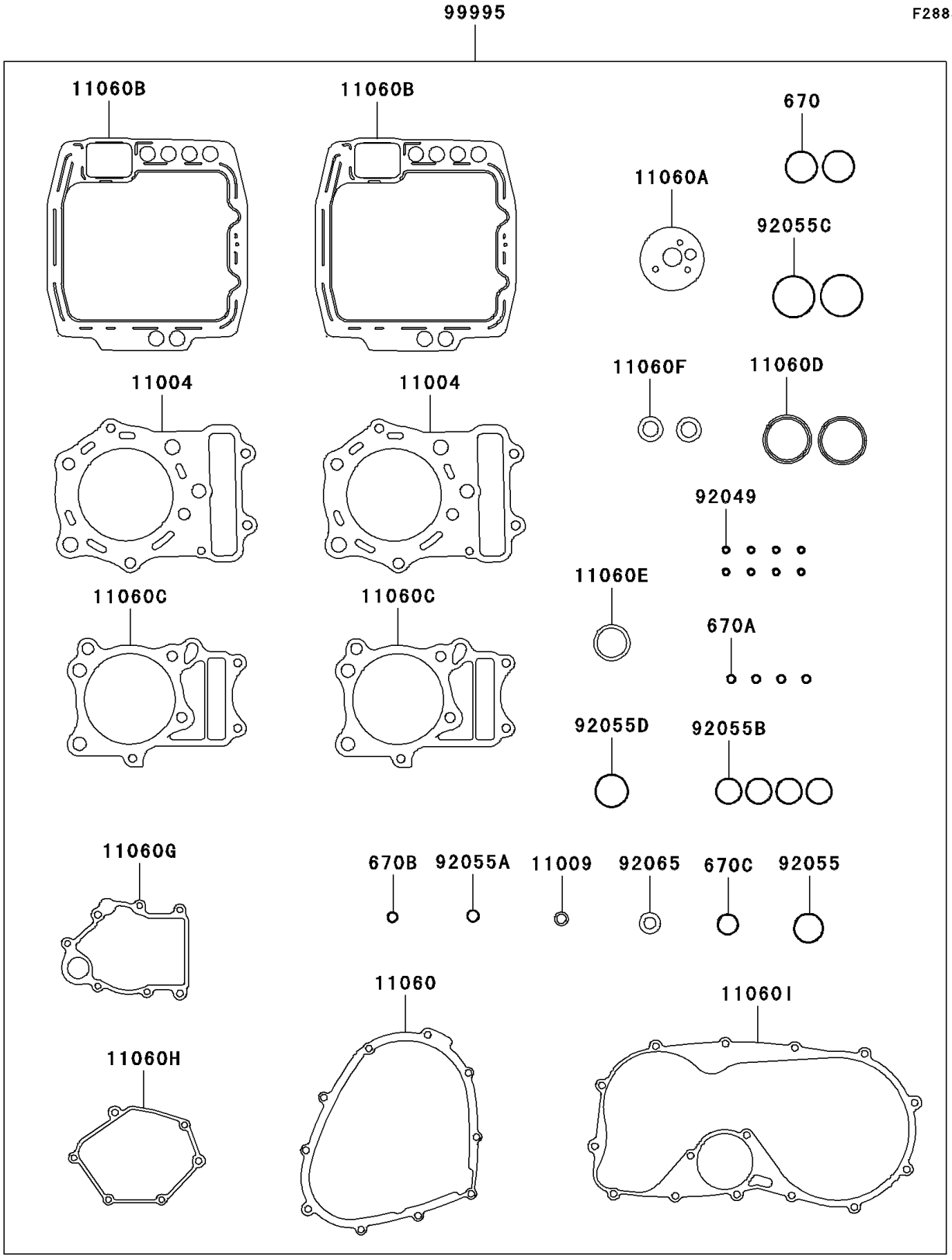

© 2026 Kawasaki Motors Corp., U.S.A.

2003 Vulcan 800 Classic

PARTS LIST

Gasket Kit

ITEM NAME	PART NUMBER	QUANTITY
O RING (Ref # 670)	670B3034	2
O RING,7MM (Ref # 670A)	670D1507	4
O RING,9MM (Ref # 670B)	670D1509	1
O RING,20MM (Ref # 670C)	670D2020	1
GASKET-HEAD (Ref # 11004)	11004-1310	2
GASKET,10X14.5X1.5 (Ref # 11009)	11009-1105	1
GASKET,GENERATOR COVER (Ref # 11060)	11060-1089	1
GASKET,OIL FILTER (Ref # 11060A)	11060-1092	1
GASKET,HEAD COVER (Ref # 11060B)	11060-1677	2
GASKET,CYLINDER BASE (Ref # 11060C)	11060-1678	2
GASKET,EXHAUST PIPE (Ref # 11060D)	11060-1680	2
GASKET,JOINT (Ref # 11060E)	11060-1681	1
GASKET,TENSIONER (Ref # 11060F)	11060-1682	2
GASKET,TRANSMISSION COVER (Ref # 11060G)	11060-1683	1
GASKET,MECHANISM COVER (Ref # 11060H)	11060-1685	1
GASKET,CLUTCH COVER (Ref # 11060I)	11060-1926	1
SEAL-OIL,VSB58.558 (Ref # 92049)	92049-1218	8
RING-O,31.7X2.4 (Ref # 92055)	92055-049	1
RING-O,13X1.9 (Ref # 92055A)	92055-1021	1
RING-O,27.7X1.9 (Ref # 92055B)	92055-1272	4
RING-O,44.7X2.4 (Ref # 92055C)	92055-1279	2
RING-O,35.2X2.4 (Ref # 92055D)	92055-1358	1
GASKET,12X22X2,DRAIN PLUG (Ref # 92065)	92065-097	1
GASKET-SET,VN800A/B (Ref # 99995)	99995-1394	1

© 2026 Kawasaki Motors Corp., U.S.A.