2003 Vulcan 800 Classic

PARTS DIAGRAM

Cables

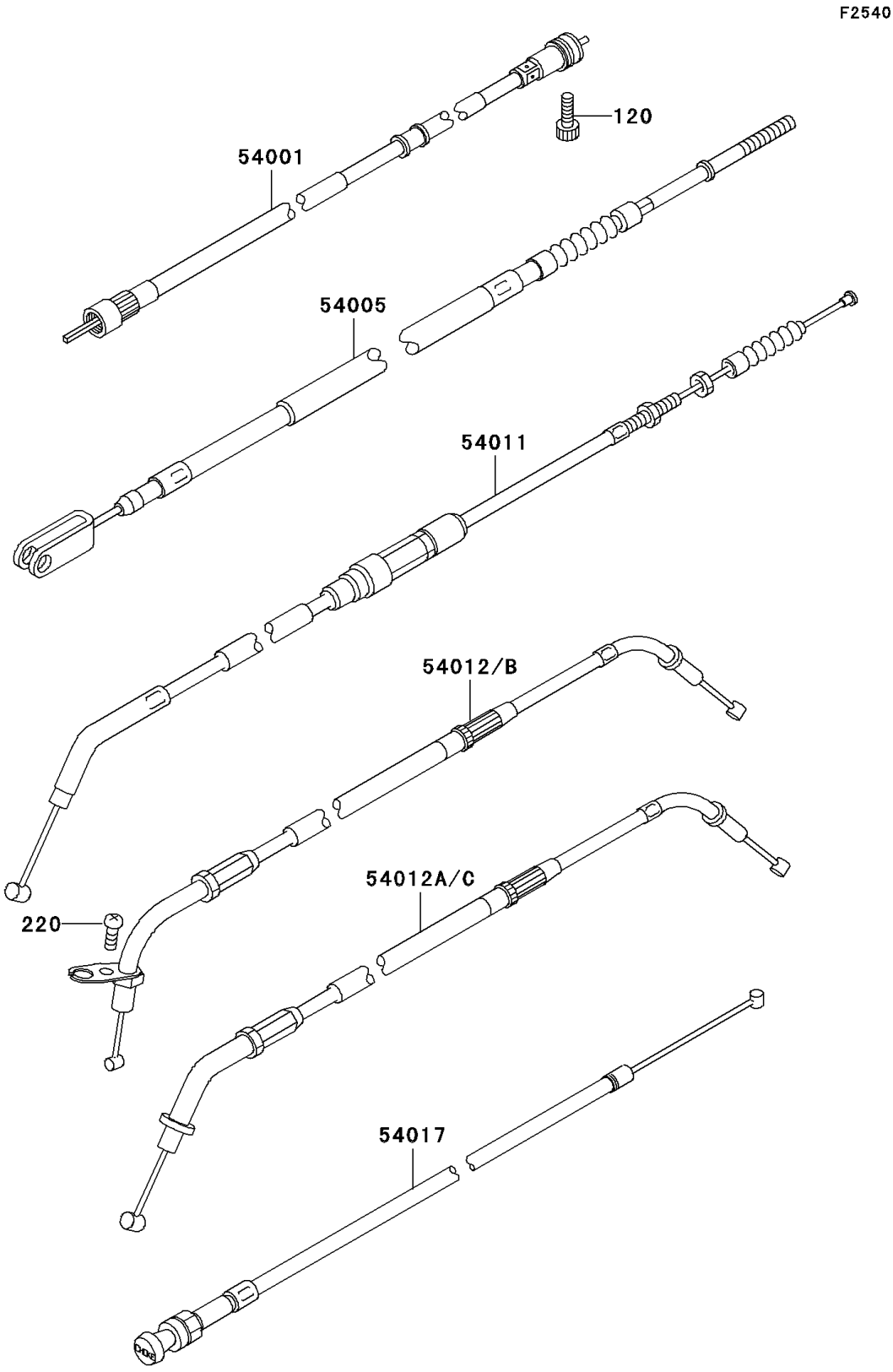

© 2026 Kawasaki Motors Corp., U.S.A.

2003 Vulcan 800 Classic

PARTS LIST

Cables

ITEM NAME	PART NUMBER	QUANTITY
BOLT-SOCKET (Ref # 120)	120P0520	1
SCREW-PAN-CROSS (Ref # 220)	220F0514	1
CABLE-SPEEDMETER (Ref # 54001)	54001-1219	1
CABLE-BRAKE (Ref # 54005)	54005-1182	1
CABLE-CLUTCH (Ref # 54011)	54011-1356	1
CABLE-THROTTLE,OPENING (Ref # 54012B)	54012-1525	1
CABLE-THROTTLE,CLOSING (Ref # 54012C)	54012-1526	1
CABLE-STARTER (Ref # 54017)	54017-1201	1

© 2026 Kawasaki Motors Corp., U.S.A.