2003 Vulcan 800 Classic

PARTS DIAGRAM

Carburetor

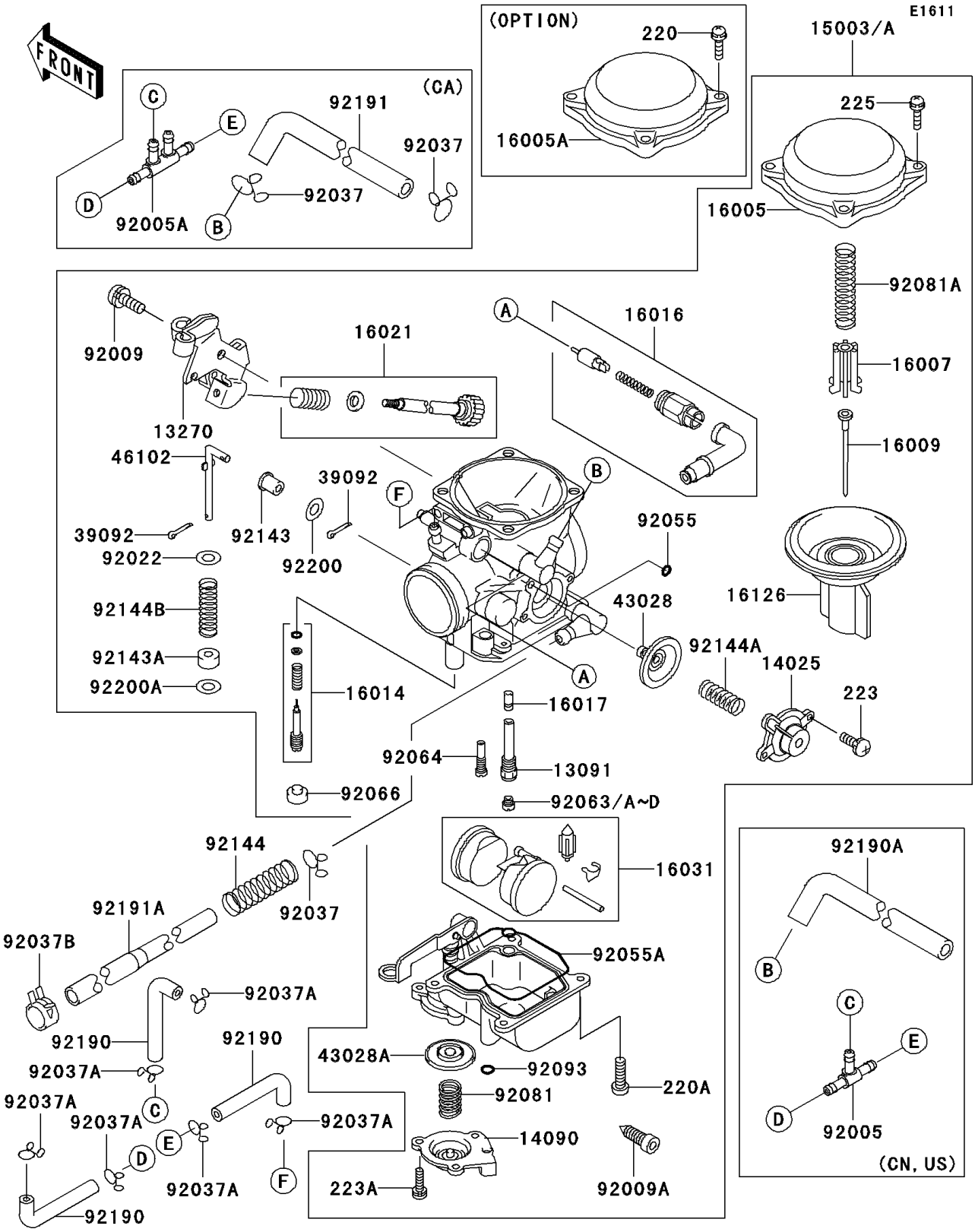

© 2026 Kawasaki Motors Corp., U.S.A.

2003 Vulcan 800 Classic

PARTS LIST

Carburetor

ITEM NAME	PART NUMBER	QUANTITY

© 2026 Kawasaki Motors Corp., U.S.A.