2003 Vulcan 800 Classic

PARTS DIAGRAM

Cylinder Head Cover

Kawasaki
Let the Good Times Roll®

E1112

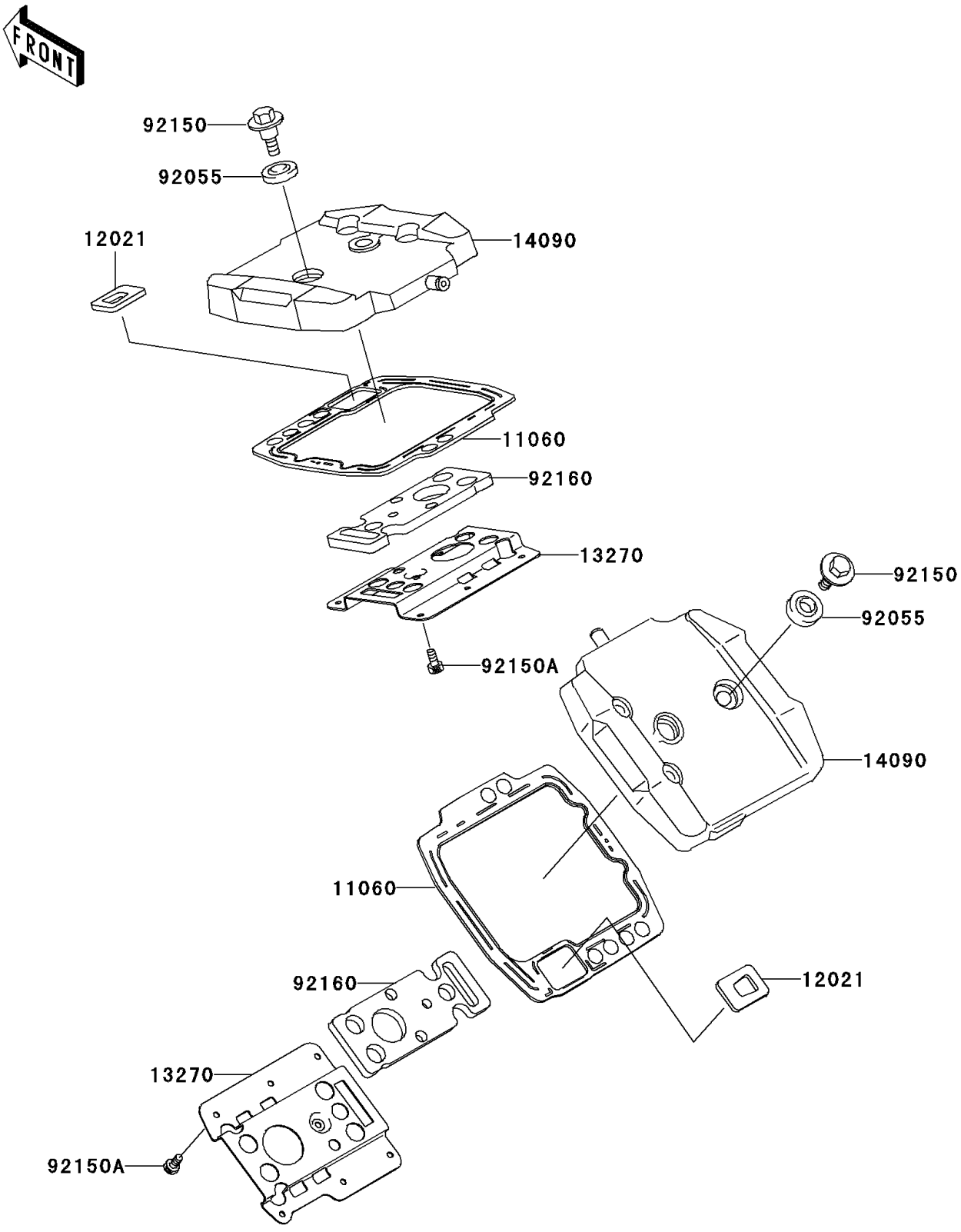

© 2026 Kawasaki Motors Corp., U.S.A.

2003 Vulcan 800 Classic

PARTS LIST

Cylinder Head Cover

ITEM NAME	PART NUMBER	QUANTITY
GASKET,HEAD COVER (Ref # 11060)	11060-1677	2
VALVE-ASSY-REED (Ref # 12021)	12021-1102	2
PLATE (Ref # 13270)	13270-1490	2
COVER,HEAD (Ref # 14090)	14090-1551	2
RING-O,HEAD COVER BOLT (Ref # 92055)	92055-1352	6
BOLT,HEAD COVER (Ref # 92150)	92150-1447	6
BOLT,5X8 (Ref # 92150A)	92150-1955	14
DAMPER,HEAD COVER (Ref # 92160)	92160-1659	2

© 2026 Kawasaki Motors Corp., U.S.A.