2021 KLX®300R

PARTS DIAGRAM

Front Fender(s)

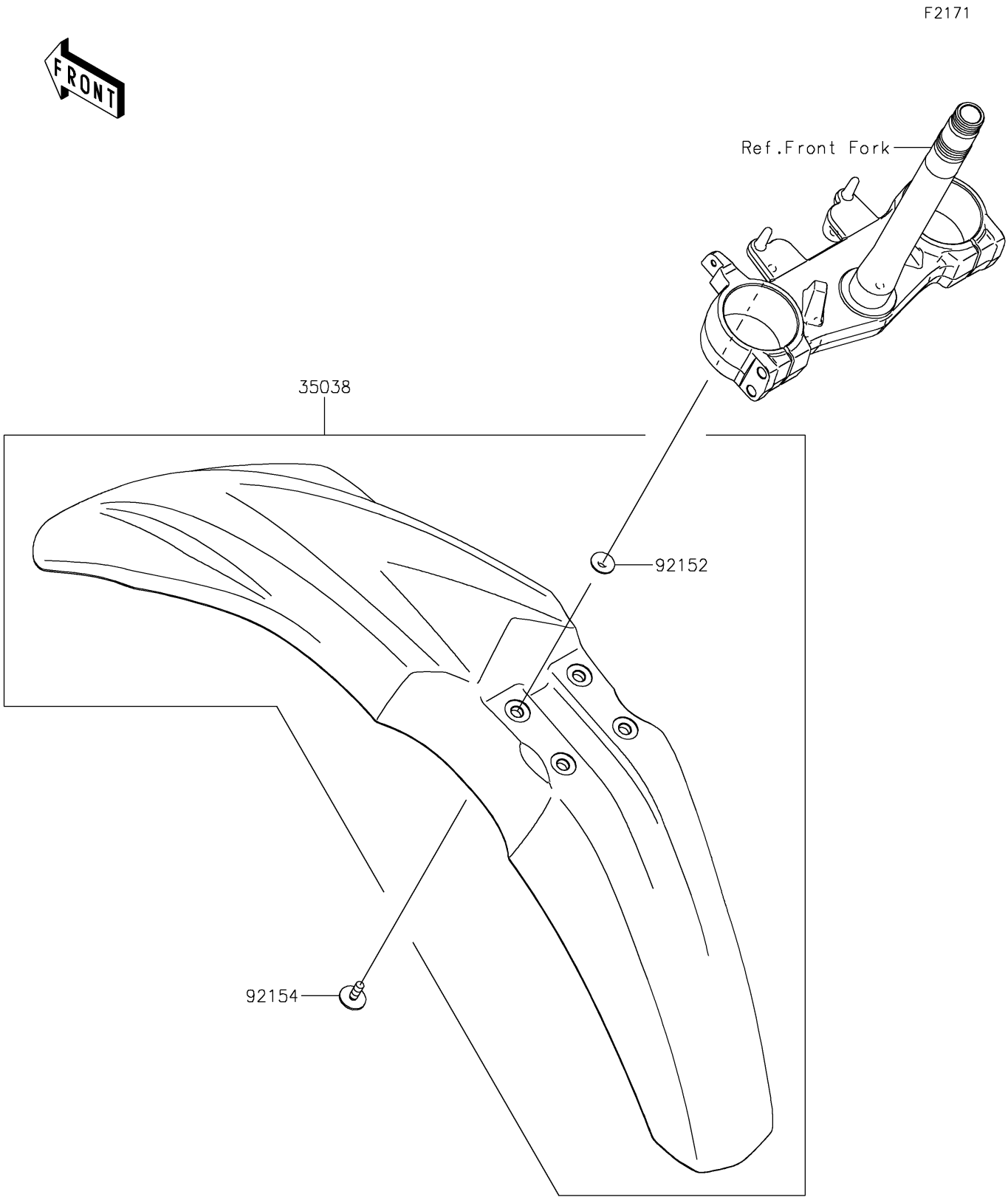

© 2026 Kawasaki Motors Corp., U.S.A.

2021 KLX®300R

PARTS LIST

Front Fender(s)

ITEM NAME	PART NUMBER	QUANTITY
FENDER-FRONT,L.GREEN (Ref # 35038)	35038-0008-290	1
COLLAR (Ref # 92152)	92152-1422	4
BOLT,6X18 (Ref # 92154)	92154-2973	4

© 2026 Kawasaki Motors Corp., U.S.A.