2021 KLX®300R

PARTS DIAGRAM

Starter Motor

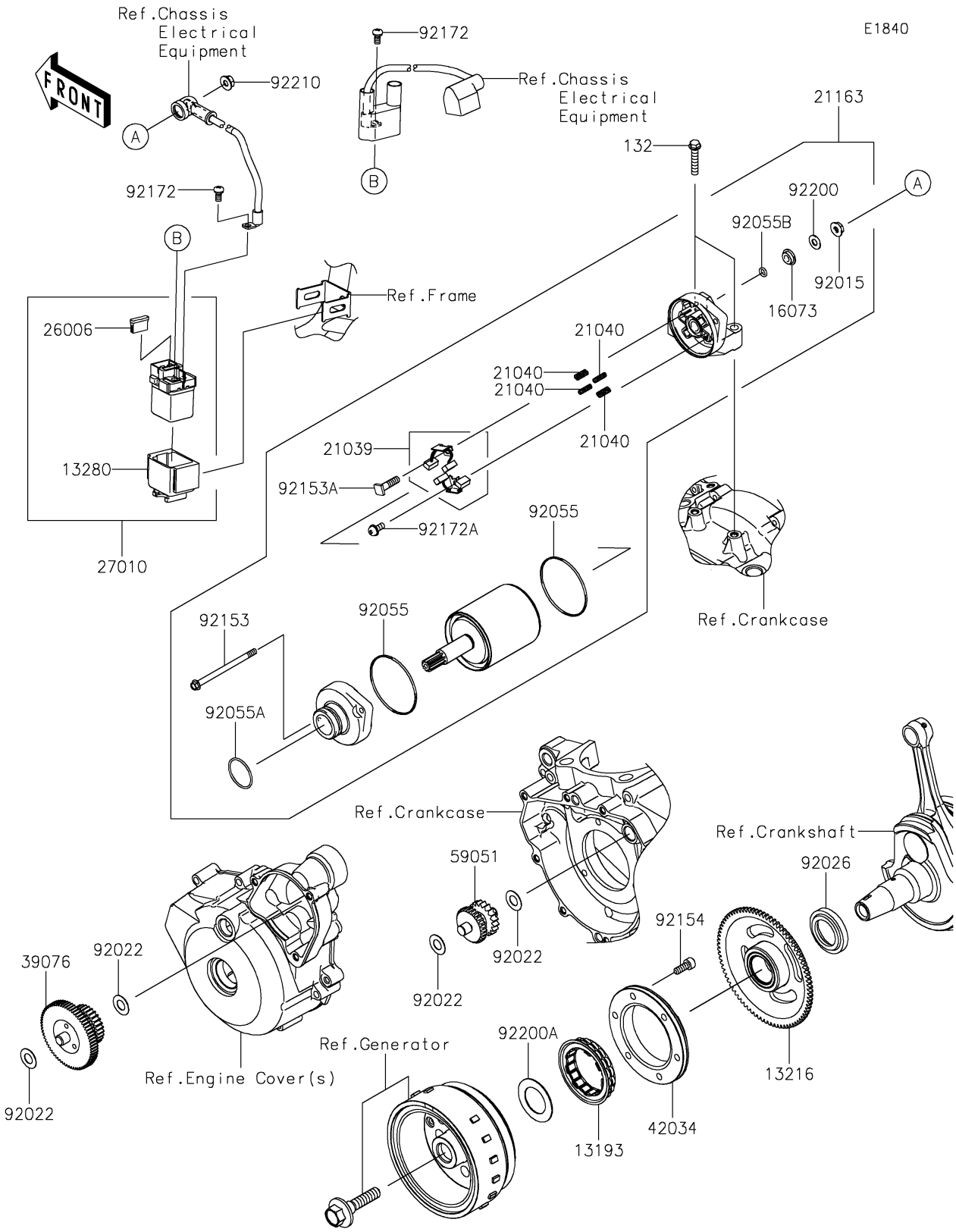

© 2026 Kawasaki Motors Corp., U.S.A.

2021 KLX®300R

PARTS LIST

Starter Motor

ITEM NAME	PART NUMBER	QUANTITY
CLUTCH-ASSY-ONEWAY (Ref # 13193)	13193-0007	1
GEAR-COMP,ONEWAY CLUTCH (Ref # 13216)	13216-1148	1
HOLDER (Ref # 13280)	13280-0818	1
INSULATOR (Ref # 16073)	16073-0053	1
BRUSH,CARBON (Ref # 21039)	21039-0004	1
SPRING-BRUSH (Ref # 21040)	21040-0003	4
STARTER-ELECTRIC (Ref # 21163)	21163-0046	1
FUSE,BLADE,20A,YELLOW (Ref # 26006)	26006-1051	1
SWITCH (Ref # 27010)	27010-0765	1
LIMITER,STARTER IDLE GEAR (Ref # 39076)	39076-0020	1
COUPLING (Ref # 42034)	42034-0048	1
GEAR-SPUR,IDLE (Ref # 59051)	59051-0785	1
NUT,STARTER MOTOR (Ref # 92015)	92015-1476	1
WASHER,10.2X20X0.5 (Ref # 92022)	92022-1649	4
SPACER (Ref # 92026)	92026-0762	1
RING-O (Ref # 92055)	92055-0136	2
RING-O (Ref # 92055A)	92055-1276	1
RING-O,4.5X2.0 (Ref # 92055B)	92055-1370	1
BOLT (Ref # 92153)	92153-1850	2
BOLT (Ref # 92153A)	92153-1866	1
BOLT,SOCKET,6X16 (Ref # 92154)	92154-0235	6
SCREW-PAN-WS-CROS,5X10 (Ref # 92172)	92172-0234	2
SCREW (Ref # 92172A)	92172-0334	1
WASHER (Ref # 92200)	92200-0386	1
WASHER,27.2X44X1 (Ref # 92200A)	92200-0908	1
NUT,6MM (Ref # 92210)	92210-0188	1
BOLT-FLANGED-SMALL,6X30 (Ref # 132)	132BC0630	2

© 2026 Kawasaki Motors Corp., U.S.A.