2022 KLX®300R

PARTS DIAGRAM

Air Cleaner

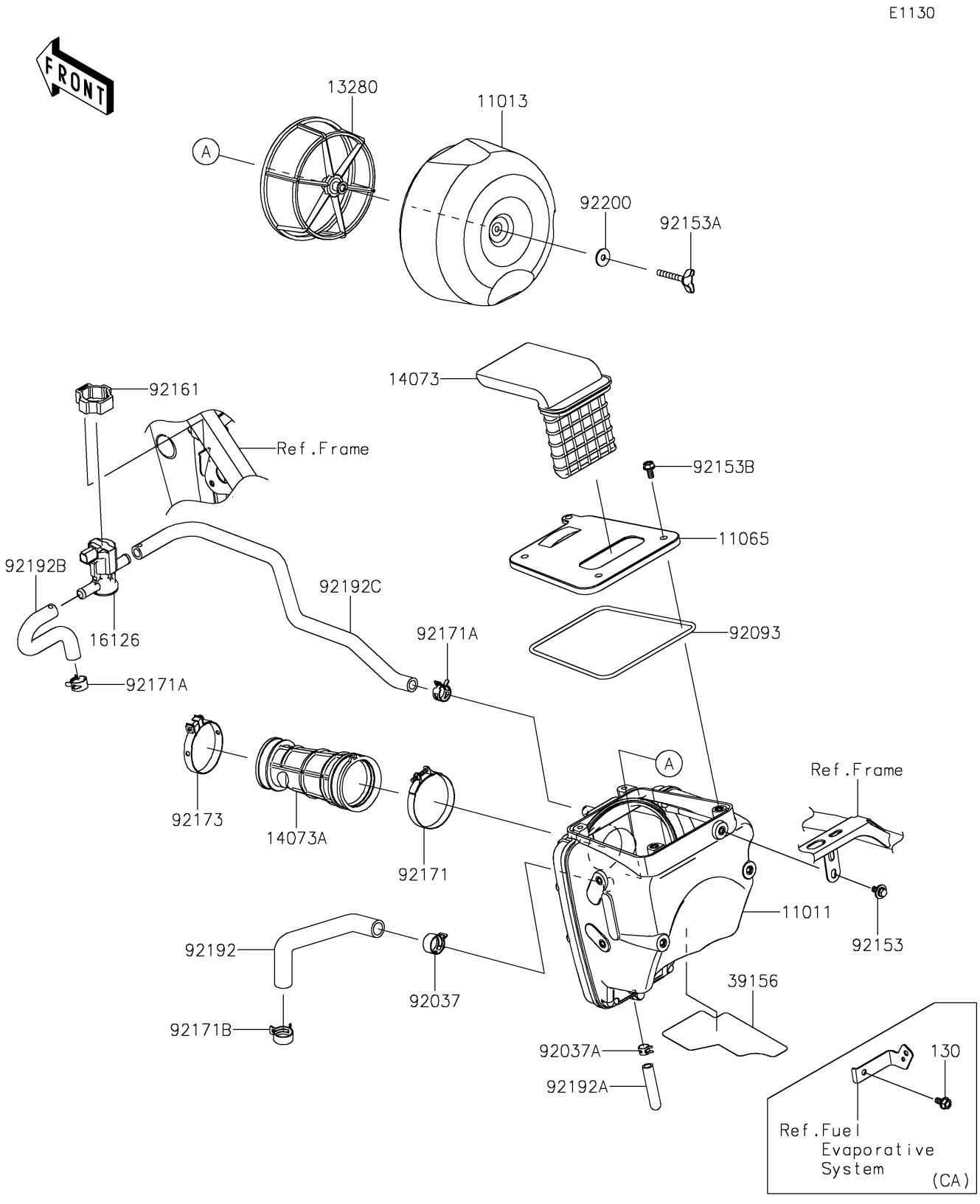

© 2026 Kawasaki Motors Corp., U.S.A.

2022 KLX®300R

PARTS LIST

Air Cleaner

ITEM NAME	PART NUMBER	QUANTITY
CASE-AIR FILTER (Ref # 11011)	11011-0907	1
ELEMENT-AIR FILTER (Ref # 11013)	11013-0030	1
CAP,AIR FILTER (Ref # 11065)	11065-0232	1
HOLDER (Ref # 13280)	13280-0263	1
DUCT,INTAKE (Ref # 14073)	14073-0185	1
DUCT,A/C-THROBO (Ref # 14073A)	14073-0927	1
VALVE,AIR SWITCHING (Ref # 16126)	16126-0033	1
PAD,A/F CASE (Ref # 39156)	39156-2429	1
CLAMP (Ref # 92037)	92037-1860	1
CLAMP (Ref # 92037A)	92037-2113	1
SEAL,4X535 (Ref # 92093)	92093-0102	1
BOLT,6X12 (Ref # 92153)	92153-0503	1
BOLT,WING,6X45 (Ref # 92153A)	92153-1921	1
BOLT,FLANGED,6X12 (Ref # 92153B)	92153-1922	4
DAMPER,ASWV (Ref # 92161)	92161-0499	1
CLAMP,62MM (Ref # 92171)	92171-1687	1
CLAMP (Ref # 92171A)	92171-1888	2
CLAMP (Ref # 92171B)	92171-1890	1
CLAMP,58MM (Ref # 92173)	92173-0927	1
TUBE,BREATHER (Ref # 92192)	92192-0594	1
TUBE,A/C-DRAIN (Ref # 92192A)	92192-0921	1
TUBE,CAP-ASWV (Ref # 92192B)	92192-2266	1
TUBE,ASWV-A/F CASE (Ref # 92192C)	92192-2273	1
WASHER,6.5X20X1.6 (Ref # 92200)	92200-0411	1
BOLT-FLANGED,6X12 (Ref # 130)	130BC0612	1

© 2026 Kawasaki Motors Corp., U.S.A.