2000 Vulcan 800

PARTS DIAGRAM

Generator

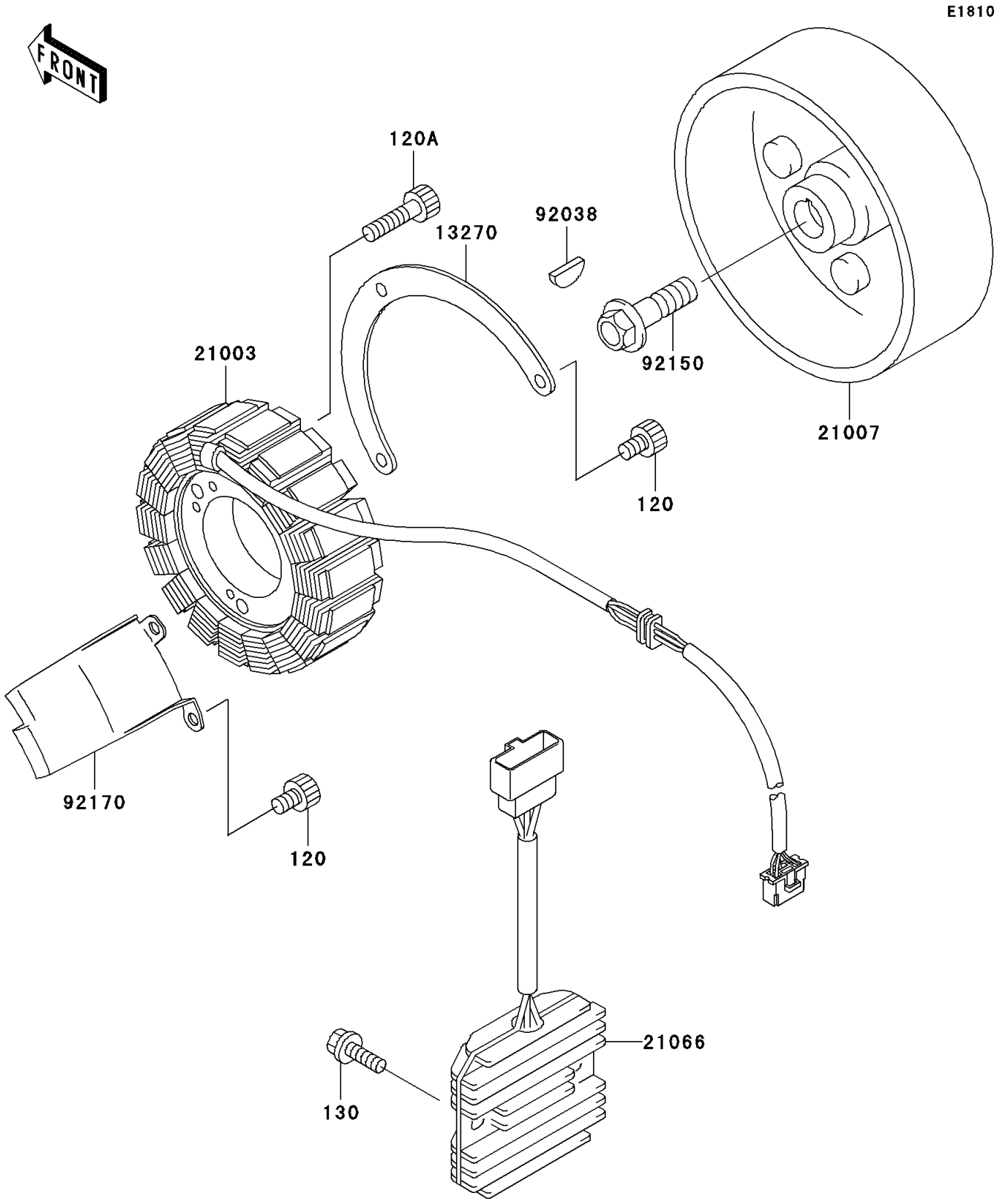

© 2026 Kawasaki Motors Corp., U.S.A.

2000 Vulcan 800

PARTS LIST

Generator

ITEM NAME	PART NUMBER	QUANTITY
BOLT-SOCKET (Ref # 120)	120P0510	5
BOLT-SOCKET,6X35 (Ref # 120A)	120P0635	3
BOLT-FLANGED (Ref # 130)	130J0620	2
PLATE (Ref # 13270)	13270-1398	1
STATOR (Ref # 21003)	21003-1383	1
ROTOR,GENERATOR (Ref # 21007)	21007-1279	1
REGULATOR-VOLTAGE (Ref # 21066)	21066-1099	1
KEY,WOODRUFF (Ref # 92038)	92038-001	1
BOLT,12X40 (Ref # 92150)	92150-1717	1
CLAMP (Ref # 92170)	92170-1559	1

© 2026 Kawasaki Motors Corp., U.S.A.