2001 Vulcan 800

PARTS DIAGRAM

Muffler(s)

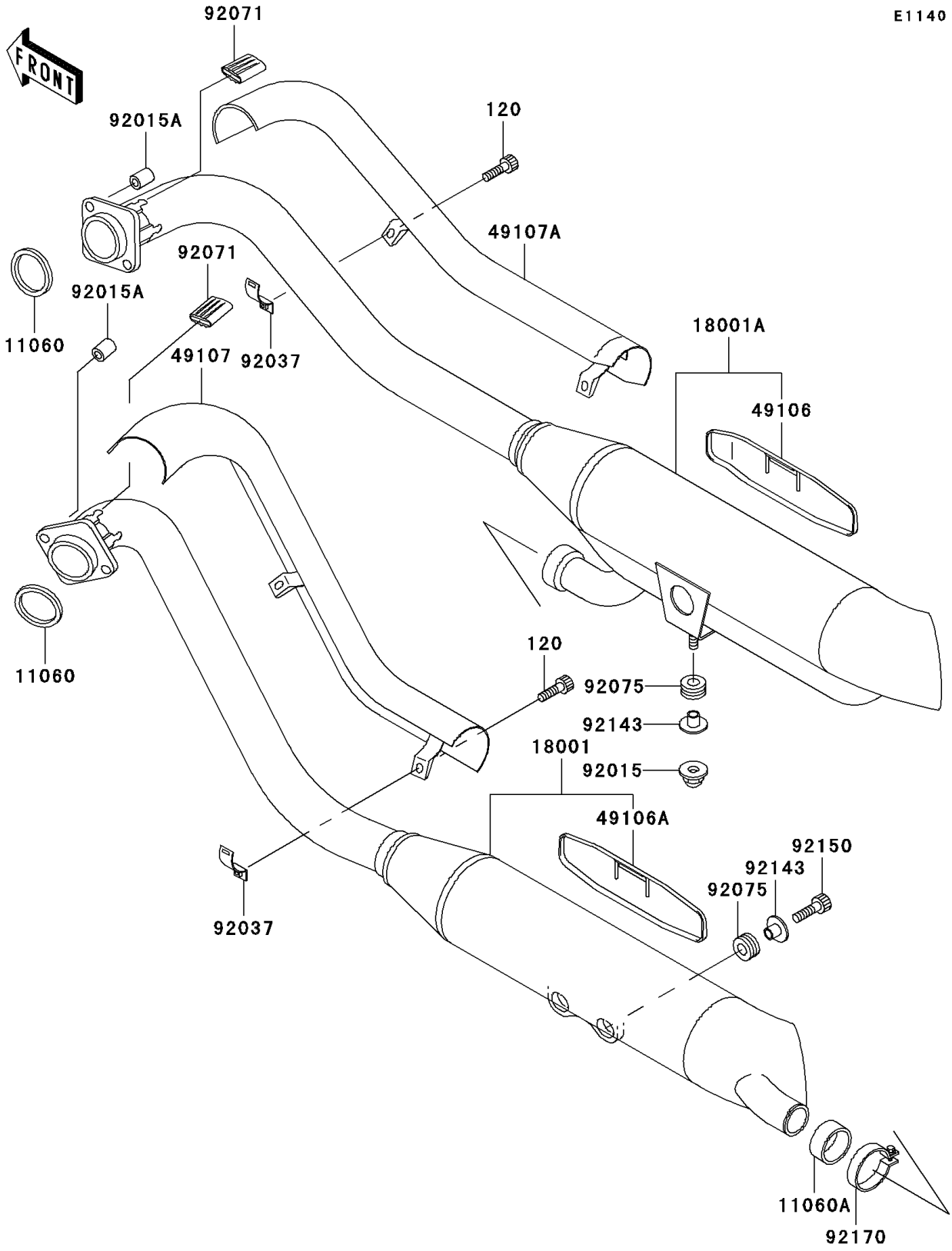

© 2026 Kawasaki Motors Corp., U.S.A.

2001 Vulcan 800

PARTS LIST

Muffler(s)

ITEM NAME	PART NUMBER	QUANTITY
BOLT-SOCKET (Ref # 120)	120Z0620	4
GASKET,EXHAUST PIPE (Ref # 11060)	11060-1680	2
GASKET,JOINT (Ref # 11060A)	11060-1681	1
MUFFLER,FR (Ref # 18001)	18001-1932	1
MUFFLER,RR (Ref # 18001A)	18001-1933	1
COVER-MUFFLER,RR (Ref # 49106)	49106-1179	1
COVER-MUFFLER,FR (Ref # 49106A)	49106-1182	1
COVER-EXHAUST PIPE,FR (Ref # 49107)	49107-1113	1
COVER-EXHAUST PIPE,RR (Ref # 49107A)	49107-1114	1
NUT,CAP,8MM (Ref # 92015)	92015-1370	1
NUT (Ref # 92015A)	92015-1983	4
CLAMP,EXHAUST PIPE COVER (Ref # 92037)	92037-1613	4
GROMMET (Ref # 92071)	92071-1226	4
DAMPER (Ref # 92075)	92075-1898	3
COLLAR (Ref # 92143)	92143-1753	3
BOLT,SOCKET,8X25 (Ref # 92150)	92150-1912	2
CLAMP (Ref # 92170)	92170-1538	1

© 2026 Kawasaki Motors Corp., U.S.A.