2005 Vulcan 800

PARTS DIAGRAM

Ignition Switch/Locks/Reflectors

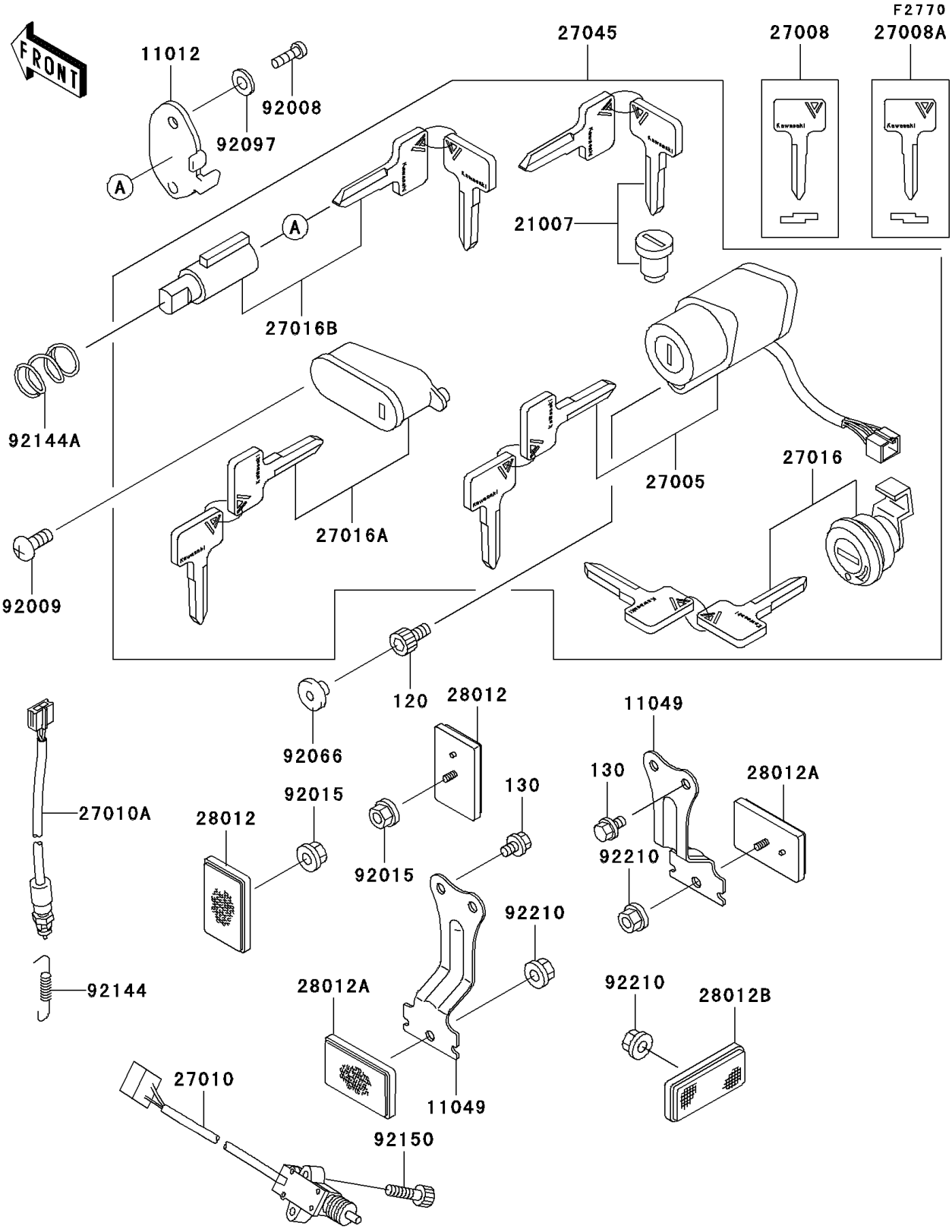

© 2026 Kawasaki Motors Corp., U.S.A.

2005 Vulcan 800

PARTS LIST

Ignition Switch/Locks/Reflectors

Kawasaki
Let the Good Times Roll®

ITEM NAME	PART NUMBER	QUANTITY
BOLT-SOCKET (Ref # 120)	120P0512	1
BOLT-FLANGED (Ref # 130)	130J0508	4
CAP,STEERING LOCK (Ref # 11012)	11012-1586	1
BRACKET,REFLECTOR (Ref # 11049)	11049-1146	2
ROTOR,LOCK,TANK CAP (Ref # 21007)	21007-5024	1
SWITCH-ASSY-IGNITION (Ref # 27005)	27005-1204	1
KEY-LOCK,BLANK,#A (Ref # 27008)	27008-1138	1
KEY-LOCK,BLANK,#B (Ref # 27008A)	27008-1139	1
SWITCH,SIDE STAND (Ref # 27010)	27010-1352	1
SWITCH,REAR BRAKE (Ref # 27010A)	27010-1487	1
LOCK-ASSY,LID (Ref # 27016)	27016-5225	2
LOCK-ASSY,HELMET (Ref # 27016A)	27016-5226	1
LOCK-ASSY,STEERING (Ref # 27016B)	27016-5299	1
SWITCH-ASSY (Ref # 27045)	27045-5191	1
REFLECTOR-REFLEX,FR (Ref # 28012)	28012-1009	2
REFLECTOR-REFLEX,RR (Ref # 28012A)	28012-1051	2
REFLECTOR-REFLEX (Ref # 28012B)	28012-1077	1
SCREW,3.51MM (Ref # 92008)	92008-007	1
SCREW,5X12 (Ref # 92009)	92009-1296	1
NUT,FLANGED,5MM (Ref # 92015)	92015-1656	2
PLUG (Ref # 92066)	92066-1435	1
WASHER,WAVE (Ref # 92097)	92097-003	1
SPRING,REAR BRAKE SWITCH (Ref # 92144)	92144-1141	1
SPRING,STEERING LOCK (Ref # 92144A)	92144-1222	1
BOLT,SOCKET,5X22 (Ref # 92150)	92150-1491	2
NUT,FLANGED,5MM (Ref # 92210)	92210-0007	3

© 2026 Kawasaki Motors Corp., U.S.A.