1986 Vulcan 750

PARTS DIAGRAM

Front Wheel

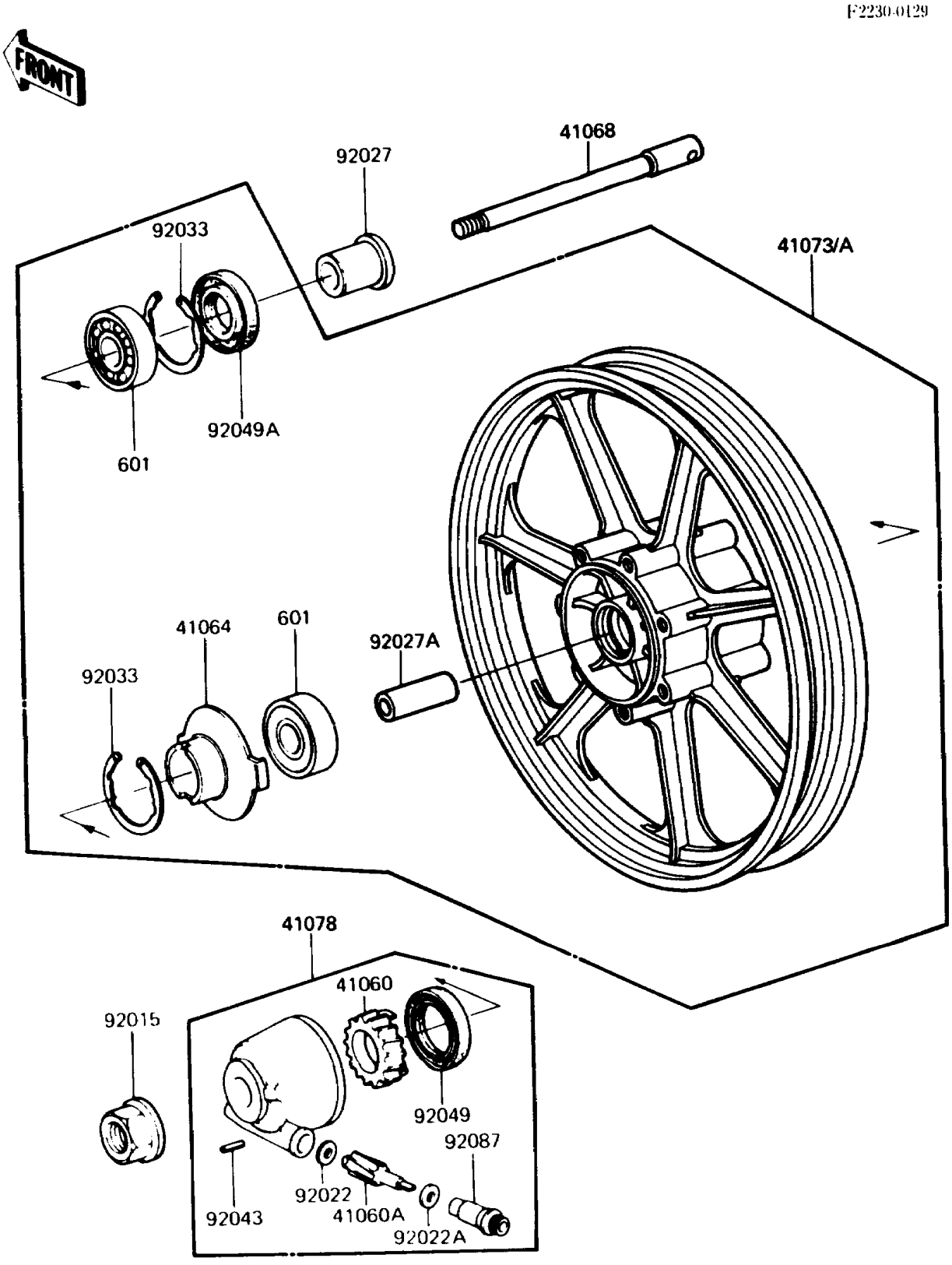

© 2026 Kawasaki Motors Corp., U.S.A.

1986 Vulcan 750

PARTS LIST

Front Wheel

ITEM NAME	PART NUMBER	QUANTITY
GEAR-METER SCREW,26T (Ref # 41060)	41059-026	1
GEAR-METER SCREW,9T (Ref # 41060A)	41060-1016	1
RECEIVER-SPEEDOMETER (Ref # 41064)	41064-1006	1
AXLE,FR (Ref # 41068)	41068-1189	1
WHEEL-ASSY,FR,F.BLACK (Ref # 41073A)	41073-1306-21	1
CASE-ASSY-METER GEAR,F.BLACK (Ref # 41078)	41078-1024	1
NUT,FLANGED,14MM (Ref # 92015)	92015-1032	1
WASHER,5.1X9X0.4 (Ref # 92022)	41063-001	1
WASHER,5.1X10X1 (Ref # 92022A)	92022-1062	1
COLLAR,L=30 (Ref # 92027)	92027-1225	1
COLLAR,L=70 (Ref # 92027A)	92027-1866	1
RING-SNAP,42MM (Ref # 92033)	92033-1041	2
PIN,SPRING (Ref # 92043)	41082-001	1
SEAL-OIL,BJN30427-C3 (Ref # 92049)	92049-1057	1
SEAL-OIL,BJN22425 (Ref # 92049A)	92049-1058	1
BUSHING-METER GEAR (Ref # 92087)	92087-1002	1
BEARING-BALL (Ref # 601)	601B6302U	2

© 2026 Kawasaki Motors Corp., U.S.A.