1989 Vulcan 750

PARTS DIAGRAM

Stand(s)

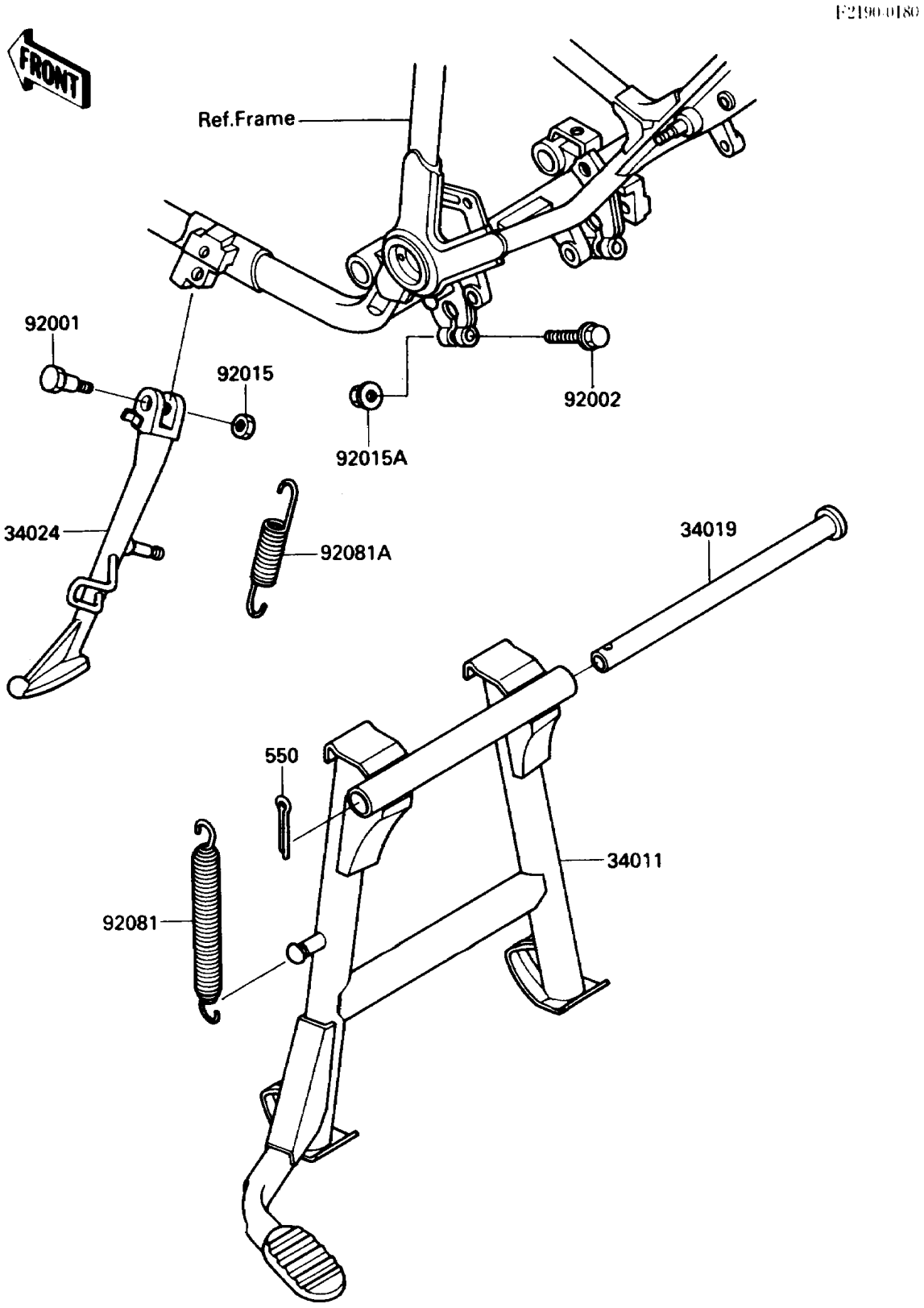

© 2026 Kawasaki Motors Corp., U.S.A.

1989 Vulcan 750

PARTS LIST

Stand(s)

ITEM NAME	PART NUMBER	QUANTITY
STAND-CENTER (Ref # 34011)	34011-1126	1
SHAFT-STAND (Ref # 34019)	34019-1051	1
STAND-SIDE (Ref # 34024)	34024-1201	1
BOLT,SIDE STAND,BLACK (Ref # 92001)	92001-1543	1
BOLT,FLANGED,8X40 (Ref # 92002)	92002-1113	2
NUT,LOCK,10MM,BLACK (Ref # 92015)	92015-1188	1
NUT,FLANGED,8MM (Ref # 92015A)	92015-1409	2
SPRING,CNT STAND (Ref # 92081)	34023-012	1
SPRING,SIDE STAND (Ref # 92081A)	92081-1894	1
PIN-COTTER,3.0X30 (Ref # 550)	550D3030	1

© 2026 Kawasaki Motors Corp., U.S.A.