1986 Vulcan 750

PARTS DIAGRAM

Battery Case

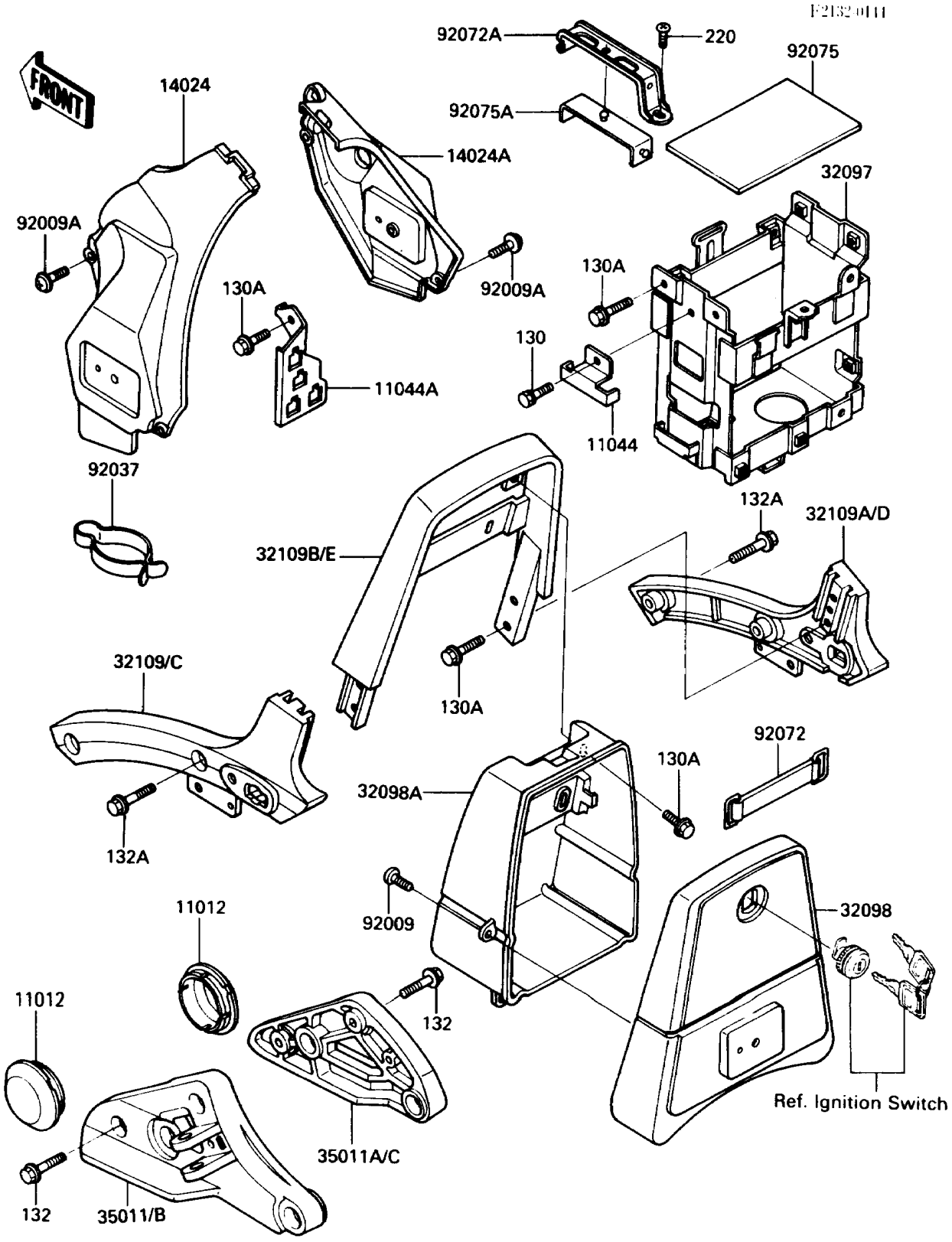

© 2026 Kawasaki Motors Corp., U.S.A.

1986 Vulcan 750

PARTS LIST

Battery Case

ITEM NAME	PART NUMBER	QUANTITY
CAP,SWING ARM (Ref # 11012)	11012-1433	2
BRACKET,JOINT BOX (Ref # 11044)	11043-1934	1
BRACKET,HARNESS (Ref # 11044A)	11043-1935	1
COVER,FUEL TANK,LH (Ref # 14024)	14025-1994	1
COVER,FUEL TANK,RH (Ref # 14024A)	14025-1995	1
CASE-BATTERY (Ref # 32097)	32097-1121	1
CASE-TOOL (Ref # 32098)	32098-1057	1
CASE-TOOL (Ref # 32098A)	32098-1058	1
GRIP-FRAME,LWR,LH (Ref # 32109)	32109-1122	1
GRIP-FRAME,LWR,RH (Ref # 32109A)	32109-1123	1
GRIP-FRAME,UPP (Ref # 32109B)	32109-1124	1
STAY,MUFFLER,LH (Ref # 35011)	35011-1239	1
STAY,MUFFLER,RH (Ref # 35011A)	35011-1240	1
SCREW,TAPPING,5X16 (Ref # 92009)	92009-1264	4
SCREW,6X14 (Ref # 92009A)	92009-1288	4
CLAMP,CABLE (Ref # 92037)	92037-093	1
BAND,L=82 (Ref # 92072)	92072-053	1
BAND,BATTERY (Ref # 92072A)	92072-1177	1
DAMPER (Ref # 92075)	92075-1076	1
DAMPER,BATTERY BAND (Ref # 92075A)	92075-1371	1
BOLT-FLANGED,6X8 (Ref # 130)	130B0608	1
BOLT-FLANGED (Ref # 130A)	130D0612	10
BOLT-FLANGED-SMALL (Ref # 132)	132E0830	4
BOLT-FLANGED-SMALL (Ref # 132A)	132E0835	4
SCREW-PAN-CROS,6X12 (Ref # 220)	220B0612	1

© 2026 Kawasaki Motors Corp., U.S.A.