1986 Vulcan 750

PARTS DIAGRAM

Frame Fittings

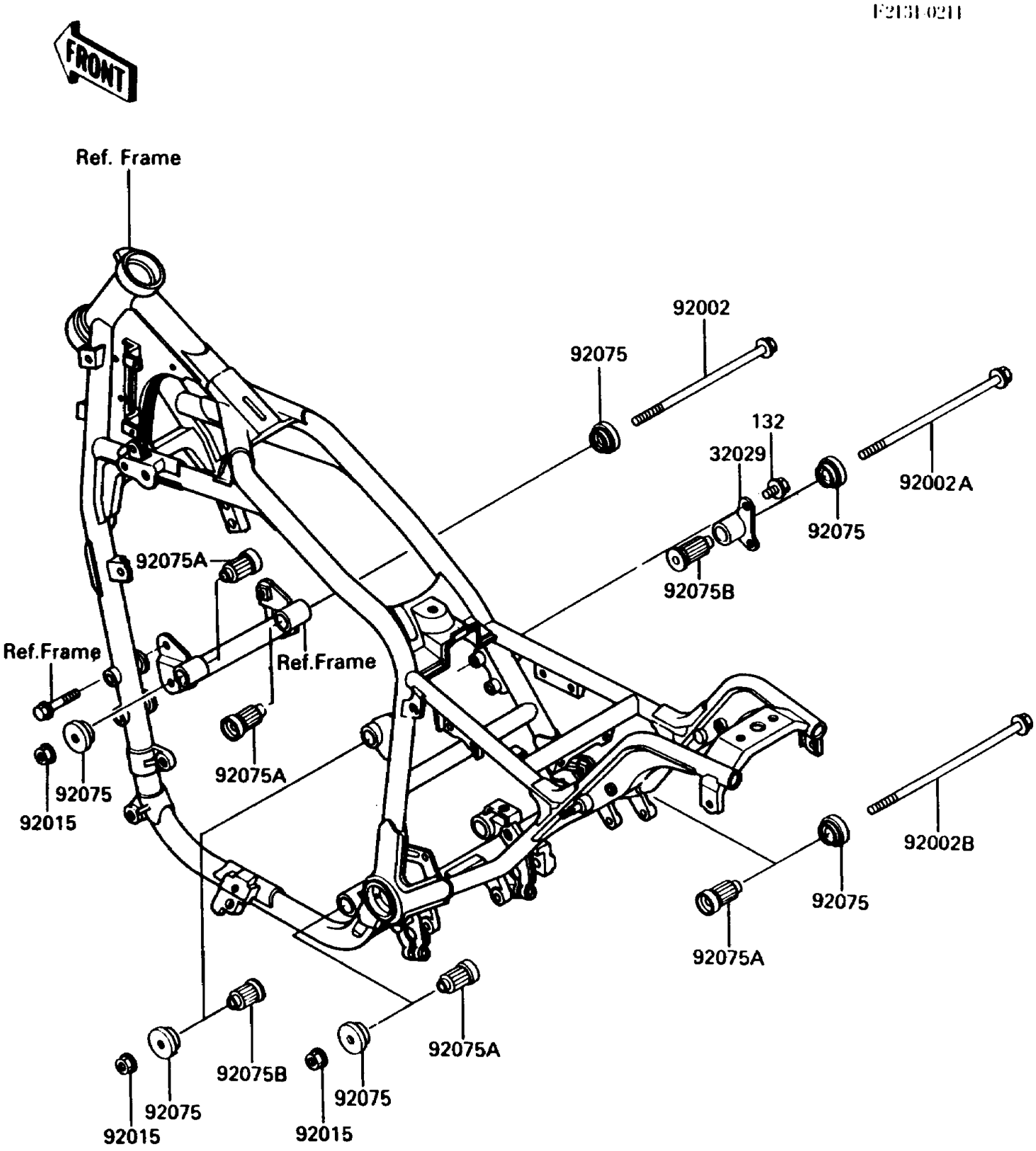

© 2026 Kawasaki Motors Corp., U.S.A.

1986 Vulcan 750

PARTS LIST

Frame Fittings

ITEM NAME	PART NUMBER	QUANTITY
BRACKET-ENGINE (Ref # 32029)	32029-1392	1
BOLT,FLANGED,10X285 (Ref # 92002)	92002-1206	1
BOLT,FLANGED,10X260 (Ref # 92002A)	92002-1454	1
BOLT,FLANGED,10X330 (Ref # 92002B)	92002-1540	1
NUT,FLANGED,10MM (Ref # 92015)	92015-1180	3
DAMPER,ENGINE BRACKET (Ref # 92075)	92075-1738	6
DAMPER,ENGINE MOUNT,MAIN (Ref # 92075A)	92075-1739	4
DAMPER,ENGINE MOUNT (Ref # 92075B)	92075-1740	2
BOLT-FLANGED-SMALL (Ref # 132)	132J0820	2

© 2026 Kawasaki Motors Corp., U.S.A.