2003 Vulcan 750

PARTS DIAGRAM

Rear Wheel/Chain

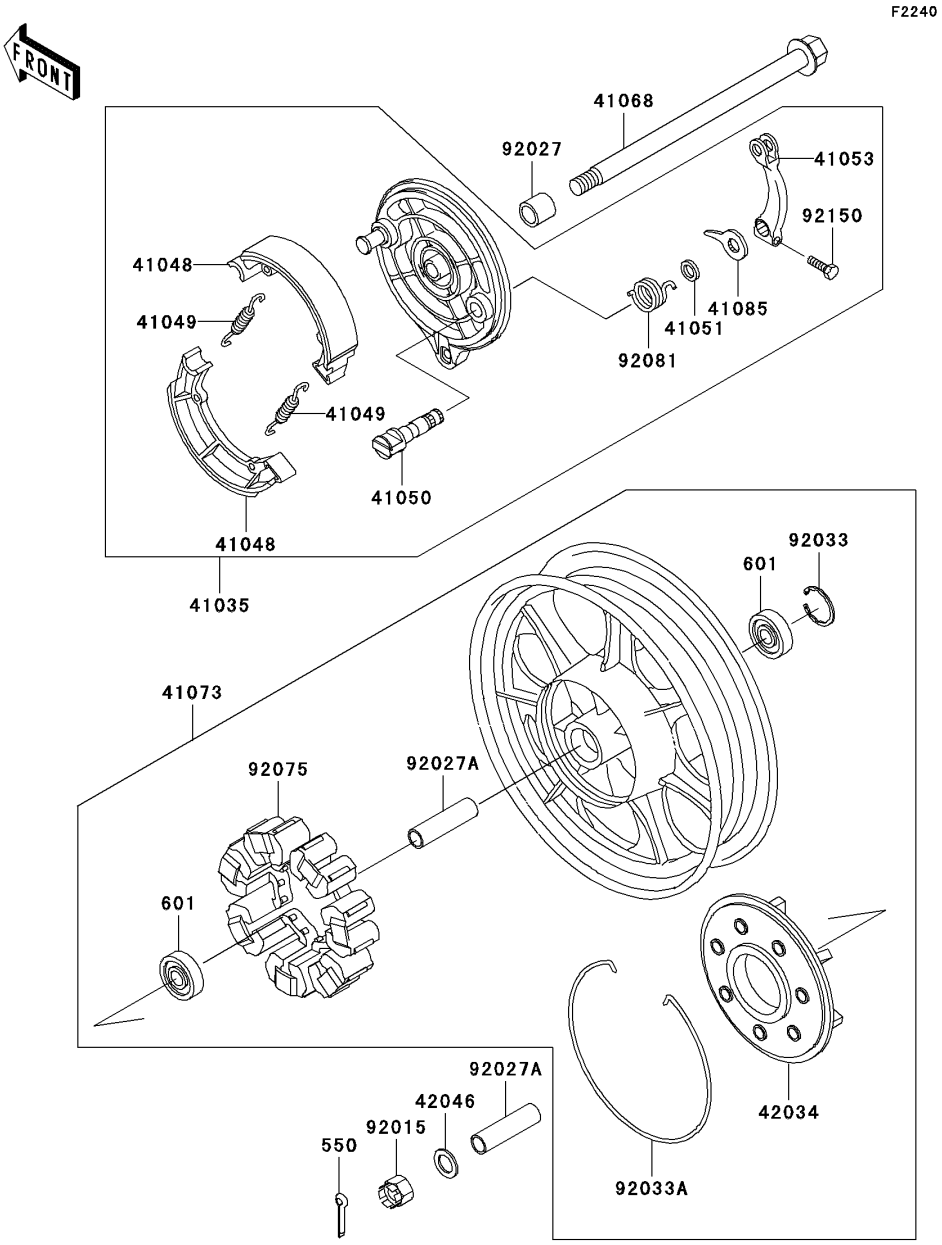

© 2026 Kawasaki Motors Corp., U.S.A.

2003 Vulcan 750

PARTS LIST

Rear Wheel/Chain

ITEM NAME	PART NUMBER	QUANTITY
PIN-COTTER,4.0X35 (Ref # 550)	550D4035	1
BEARING-BALL,#6303UUC3 (Ref # 601)	601B6303UU	2
PANEL-ASSY-BRAKE,RR (Ref # 41035)	41035-1288	1
SHOE-BRAKE (Ref # 41048)	41048-1070	2
SPRING,BRAKE SHOE (Ref # 41049)	41049-012	2
CAM-BRAKE (Ref # 41050)	41050-1059	1
SEAL,BRAKE CAM (Ref # 41051)	41051-003	1
LEVER-BRAKE CAM (Ref # 41053)	41053-1063	1
AXLE,RR (Ref # 41068)	41068-1191	1
WHEEL-ASSY,RR,SILVER NO.1 (Ref # 41073)	41073-1590-CX	1
INDICATOR (Ref # 41085)	41085-1054	1
COUPLING,RR HUB (Ref # 42034)	42034-1029	1
WASHER,17.3X32X3.2 (Ref # 42046)	42046-009	1
NUT,CASTLE,16MM (Ref # 92015)	92015-1951	1
COLLAR (Ref # 92027)	92027-1486	1
COLLAR,17.2X25X74 (Ref # 92027A)	92027-1867	2
RING-SNAP,47MM (Ref # 92033)	92033-1042	1
RING-SNAP,194MM (Ref # 92033A)	92033-1075	1
DAMPER,RR HUB SHOCK (Ref # 92075)	92075-1372	1
SPRING,BRAKE CAM LEVER RETURN (Ref # 92081)	92081-1816	1
BOLT,8X27 (Ref # 92150)	92150-1797	1

© 2026 Kawasaki Motors Corp., U.S.A.