2003 Vulcan 750

PARTS DIAGRAM

Front Wheel

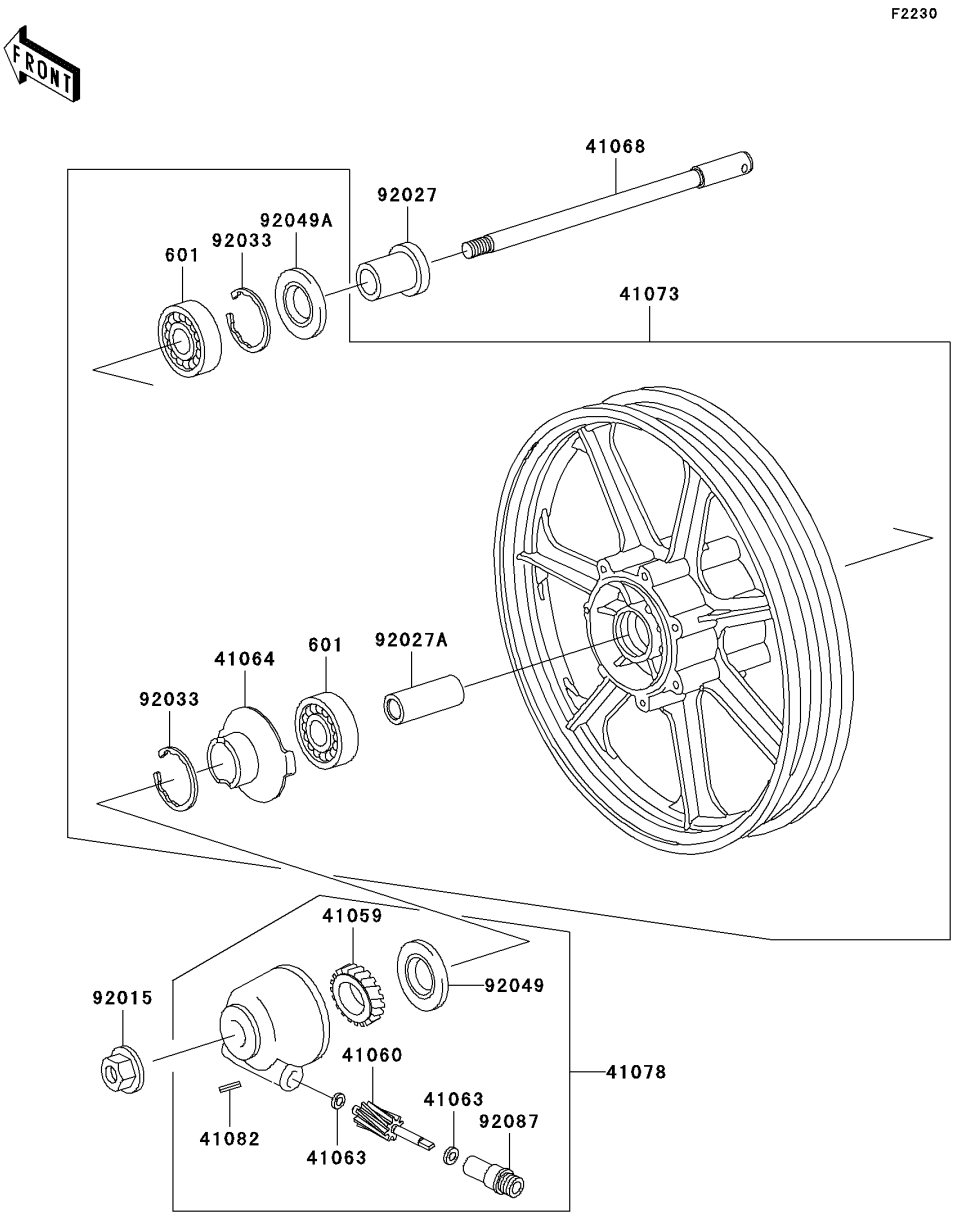

© 2026 Kawasaki Motors Corp., U.S.A.

2003 Vulcan 750

PARTS LIST

Front Wheel

ITEM NAME	PART NUMBER	QUANTITY
BEARING-BALL,#6302UG (Ref # 601)	601B6302UG	2
GEAR-METER SCREW,26T (Ref # 41059)	41059-026	1
GEAR-METER SCREW,9T (Ref # 41060)	41060-1016	1
WASHER,5.1X9X0.4 (Ref # 41063)	41063-001	2
RECEIVER-SPEEDOMETER (Ref # 41064)	41064-1006	1
AXLE,FR (Ref # 41068)	41068-1189	1
WHEEL-ASSY,FR,SILVER NO.1 (Ref # 41073)	41073-1591-CX	1
CASE-ASSY-METER GEAR,F.BLACK (Ref # 41078)	41078-1024	1
PIN,SPRING (Ref # 41082)	41082-001	1
NUT,14MM (Ref # 92015)	92015-1407	1
COLLAR,L=30 (Ref # 92027)	92027-1225	1
COLLAR,L=70 (Ref # 92027A)	92027-1866	1
RING-SNAP,42MM (Ref # 92033)	92033-1041	2
SEAL-OIL,BJN30427-C3 (Ref # 92049)	92049-1057	1
SEAL-OIL,BJN22425 (Ref # 92049A)	92049-1058	1
BUSHING-METER GEAR (Ref # 92087)	92087-1002	1

© 2026 Kawasaki Motors Corp., U.S.A.