2003 Vulcan 750

PARTS DIAGRAM

Swingarm

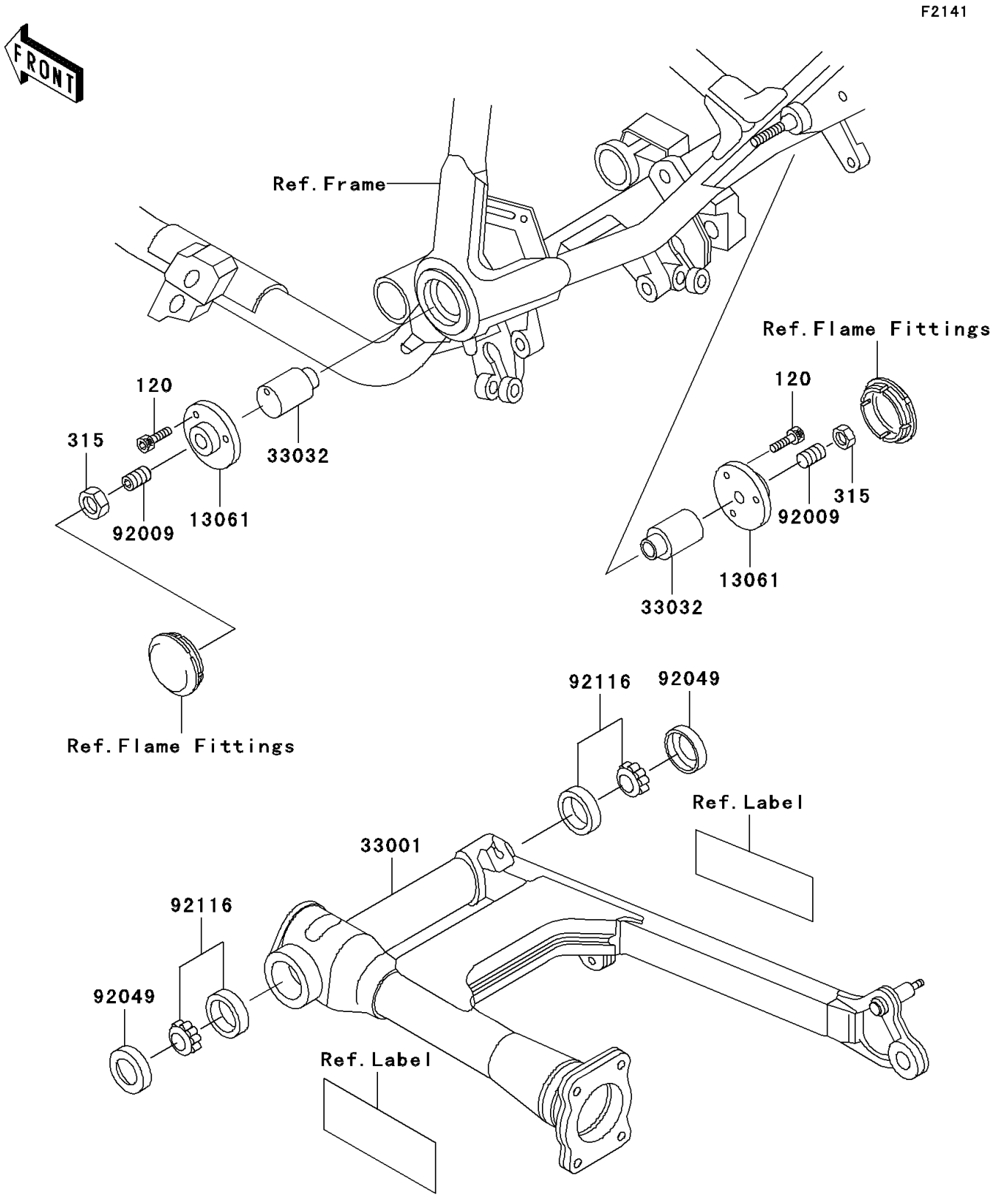

© 2026 Kawasaki Motors Corp., U.S.A.

2003 Vulcan 750

PARTS LIST

Swingarm

ITEM NAME	PART NUMBER	QUANTITY
BOLT-SOCKET,6X16 (Ref # 120)	120P0616	6
NUT-HEX-FINE (Ref # 315)	315B1200	2
BOSS (Ref # 13061)	13061-1149	2
ARM-COMP-SWING (Ref # 33001)	33001-1234	1
SHAFT-SWING ARM (Ref # 33032)	33032-1043	2
SCREW,SOCKET,12X22 (Ref # 92009)	92009-1374	2
SEAL-OIL,26406 (Ref # 92049)	92049-1030	2
BEARING-ROLLER,4T30203E1 (Ref # 92116)	92116-1001	2

© 2026 Kawasaki Motors Corp., U.S.A.