2003 Vulcan 750

PARTS DIAGRAM

Crankshaft

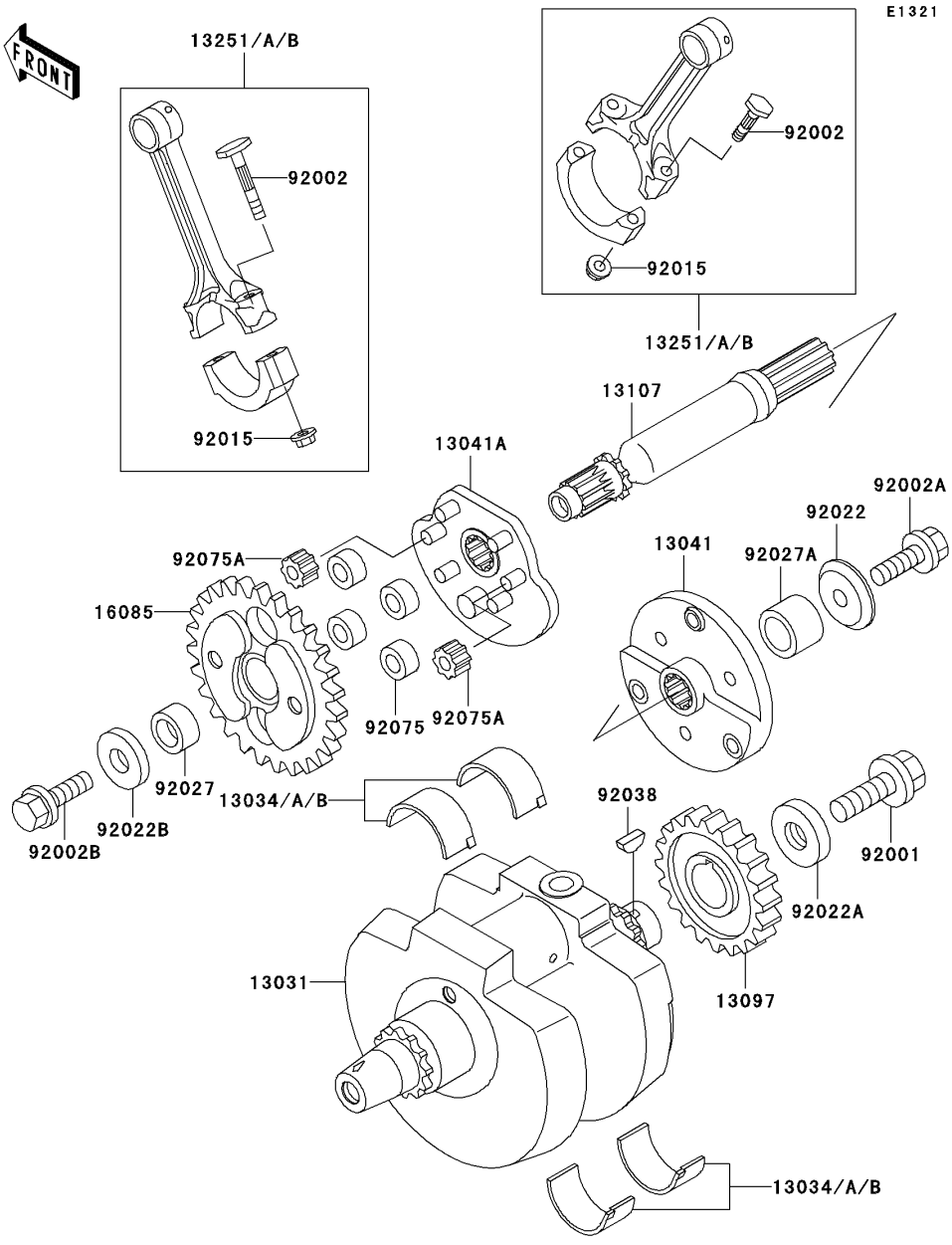

© 2026 Kawasaki Motors Corp., U.S.A.

2003 Vulcan 750

PARTS LIST

Crankshaft

ITEM NAME	PART NUMBER	QUANTITY
CRANKSHAFT-COMP (Ref # 13031)	13031-1202	1
METAL,CONNECTING ROD,BLUE (Ref # 13034)	13034-1057	AR
METAL,CONNECTING ROD,BLACK (Ref # 13034A)	13034-1058	AR
METAL,CONNECTING ROD,BROWN (Ref # 13034B)	13034-1059	AR
BALANCER,RH (Ref # 13041)	13041-1065	1
BALANCER,LH (Ref # 13041A)	13041-1068	1
GEAR-PRIMARY SPUR,35T (Ref # 13097)	13097-1129	1
SHAFT,BALANCER (Ref # 13107)	13107-1146	1
ROD-ASSY-CONNECTING,G (Ref # 13251)	13251-1055-GG	2
ROD-ASSY-CONNECTING,H (Ref # 13251A)	13251-1055-HH	2
ROD-ASSY-CONNECTING,I (Ref # 13251B)	13251-1055-II	2
GEAR,BALANCER,42T (Ref # 16085)	16085-1148	1
BOLT,FLANGED,12X40 (Ref # 92001)	92001-1146	1
BOLT,CONNECTING ROD (Ref # 92002)	92002-1405	4
BOLT,10X25 (Ref # 92002A)	92002-1635	1
BOLT,10X25 (Ref # 92002B)	92002-1636	1
NUT,CONNECTING ROD (Ref # 92015)	92015-1481	4
WASHER (Ref # 92022)	92022-1631	1
WASHER,12X32X6 (Ref # 92022A)	92022-1639	1
WASHER,10X32X4.5 (Ref # 92022B)	92022-1641	1
COLLAR,16X24X8.5 (Ref # 92027)	92027-1859	1
COLLAR,20X28X19.5 (Ref # 92027A)	92027-1860	1
KEY (Ref # 92038)	92038-1059	1
DAMPER (Ref # 92075)	92075-1747	4
DAMPER (Ref # 92075A)	92075-1748	2

© 2026 Kawasaki Motors Corp., U.S.A.