1996 Vulcan 750

PARTS DIAGRAM

Turn Signals

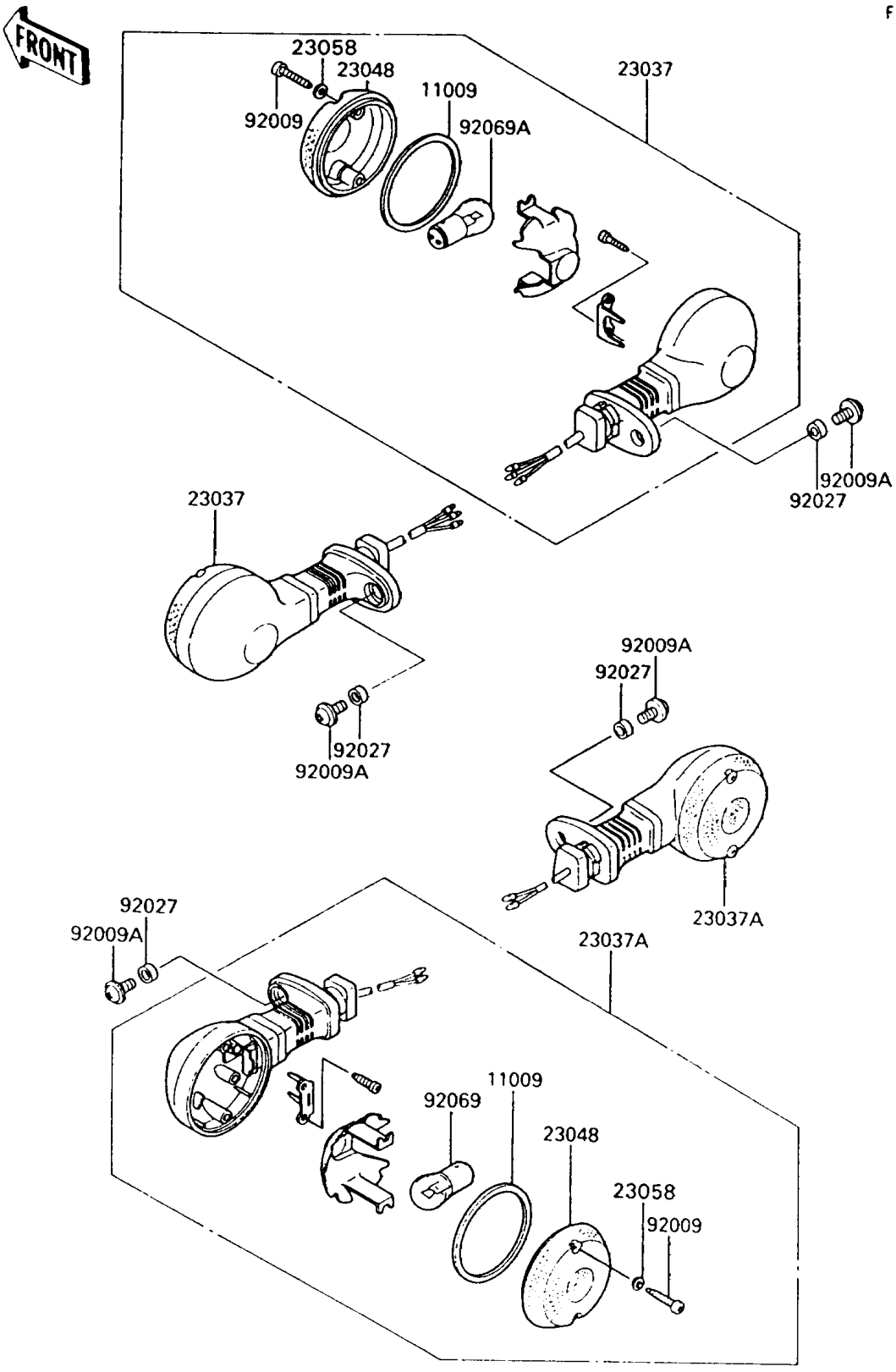

© 2026 Kawasaki Motors Corp., U.S.A.

1996 Vulcan 750

PARTS LIST

Turn Signals

ITEM NAME	PART NUMBER	QUANTITY
GASKET,SIGNAL LAMP (Ref # 11009)	11009-1413	4
LAMP-ASSY-SIGNAL,FR (Ref # 23037)	23037-1214	2
LAMP-ASSY-SIGNAL (Ref # 23037A)	23037-1220	2
LENS-SIGNAL LAMP (Ref # 23048)	23048-1066	4
WASHER,PLAIN,4MM (Ref # 23058)	23058-002	8
SCREW,TAPPING,4X25 (Ref # 92009)	92009-1069	8
SCREW,6X14 (Ref # 92009A)	92009-1288	4
COLLAR,6.8X10X6 (Ref # 92027)	92027-103	4
BULB,12V 32CP(23W) (Ref # 92069)	92069-055	2
BULB,12V 32/3CP(23/8W) (Ref # 92069A)	92069-060	2

© 2026 Kawasaki Motors Corp., U.S.A.