1995 Vulcan 750

PARTS DIAGRAM

Taillight(s)

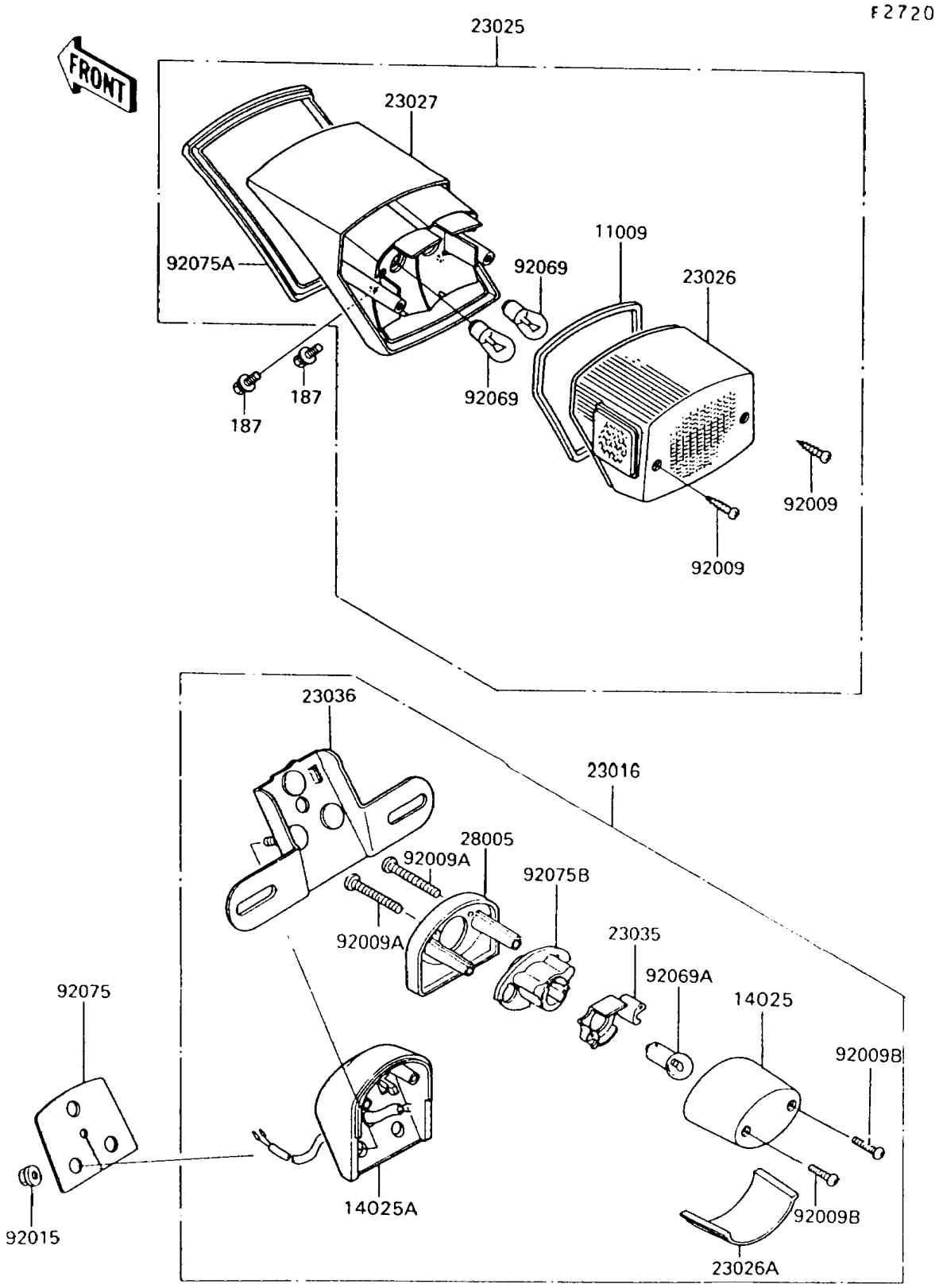

© 2026 Kawasaki Motors Corp., U.S.A.

1995 Vulcan 750

PARTS LIST

Taillight(s)

Kawasaki
Let the Good Times Roll®

ITEM NAME	PART NUMBER	QUANTITY
BOLT-UPSET-WSP (Ref # 187)	187D0614	3
GASKET,TAIL LAMP (Ref # 11009)	11009-1496	1
COVER,LICENSE LAMP (Ref # 14025)	14025-1725	1
COVER,LICENSE LAMP (Ref # 14025A)	14025-1728	1
LAMP-ASSY,LICENSE (Ref # 23016)	23016-1061	1
LAMP-TAIL (Ref # 23025)	23025-1116	1
LENS,TAIL LAMP (Ref # 23026)	23026-1063	1
LENS,LICENSE LAMP (Ref # 23026A)	23026-1064	1
BODY-COMP-TAIL LAMP (Ref # 23027)	23027-1060	1
REFLECTOR-LAMP,LICENSE (Ref # 23035)	23035-1060	1
BRACKET-TAIL LAMP (Ref # 23036)	23036-1104	1
BODY-LAMP,LICENSE (Ref # 28005)	28005-1051	1
SCREW,TAPPING,4X25 (Ref # 92009)	92009-1069	2
SCREW,TAPPING,5X40 (Ref # 92009A)	92009-1263	2
SCREW,TAPPING,4X20 (Ref # 92009B)	92009-1378	2
NUT,FLANGED,6MM (Ref # 92015)	92015-1367	3
BULB,12V 27/8W (Ref # 92069)	92069-059	2
BULB,12V 8W (Ref # 92069A)	92069-1012	1
DAMPER,LICENSE LAMP (Ref # 92075)	92075-1676	1
DAMPER,TAIL LAMP (Ref # 92075A)	92075-1692	1
DAMPER,LICENSE LAMP (Ref # 92075B)	92075-1694	1

© 2026 Kawasaki Motors Corp., U.S.A.