1996 Vulcan 750

PARTS DIAGRAM

Seat

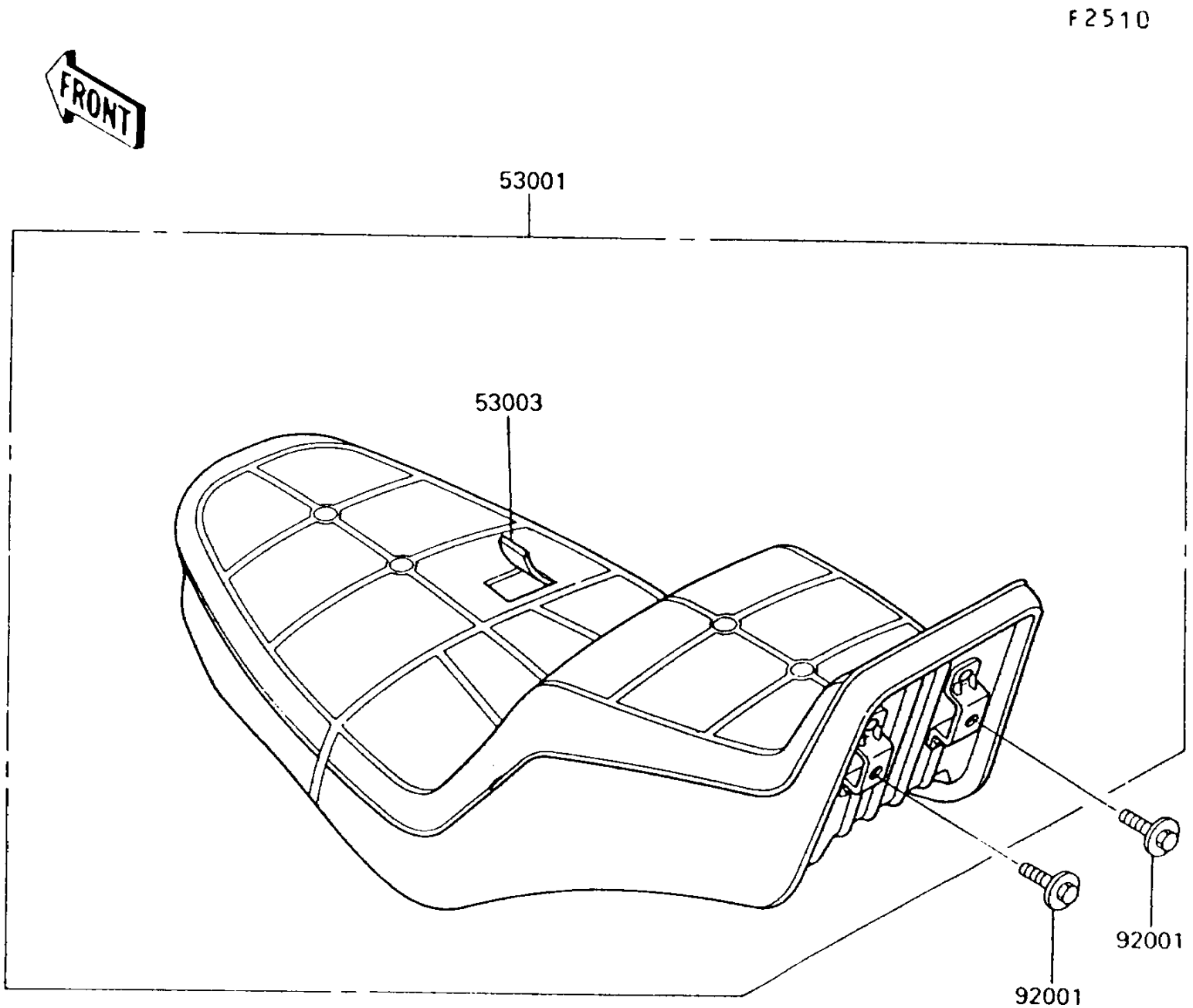

© 2026 Kawasaki Motors Corp., U.S.A.

1996 Vulcan 750

PARTS LIST

Seat

ITEM NAME	PART NUMBER	QUANTITY
SEAT-ASSY,DUAL (Ref # 53001)	53001-1454	1
LEATHER,SEAT (Ref # 53003)	53003-1157	1
BOLT,6X20 (Ref # 92001)	92001-1773	2

© 2026 Kawasaki Motors Corp., U.S.A.