1995 Vulcan 750

PARTS DIAGRAM

Tires

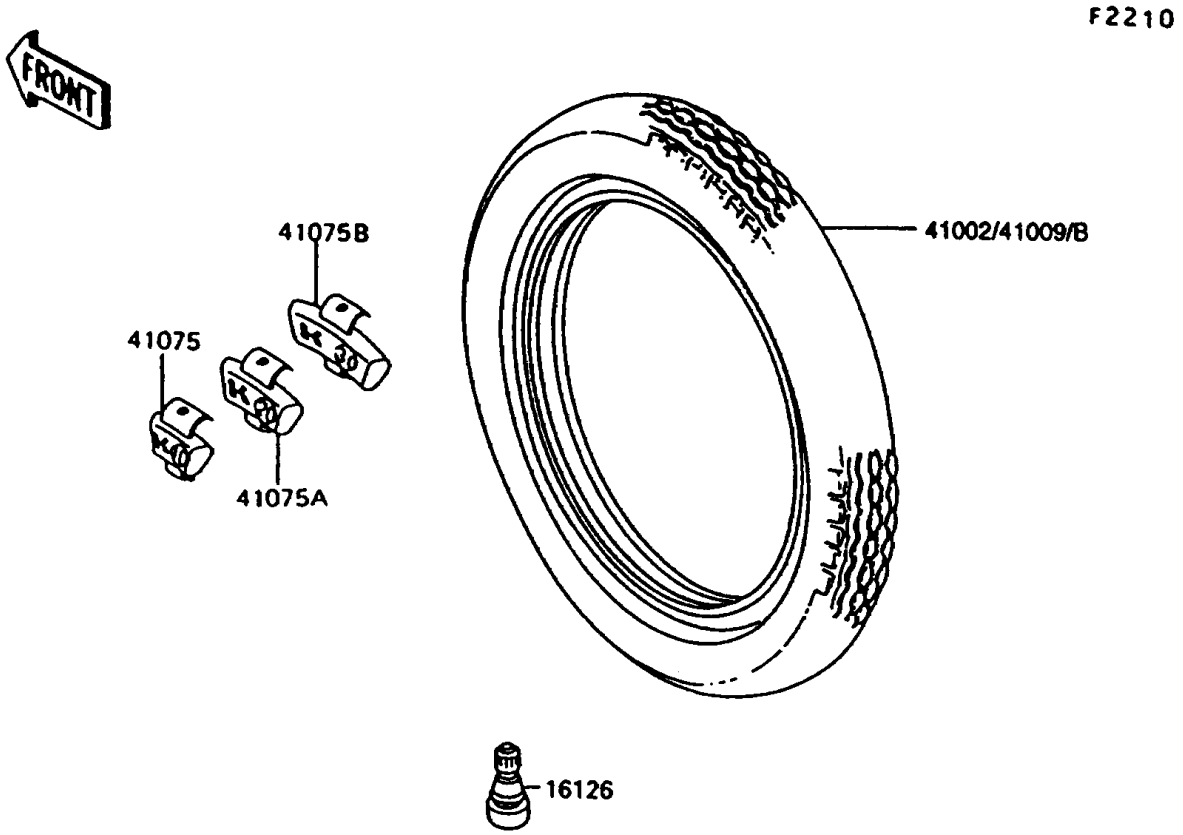

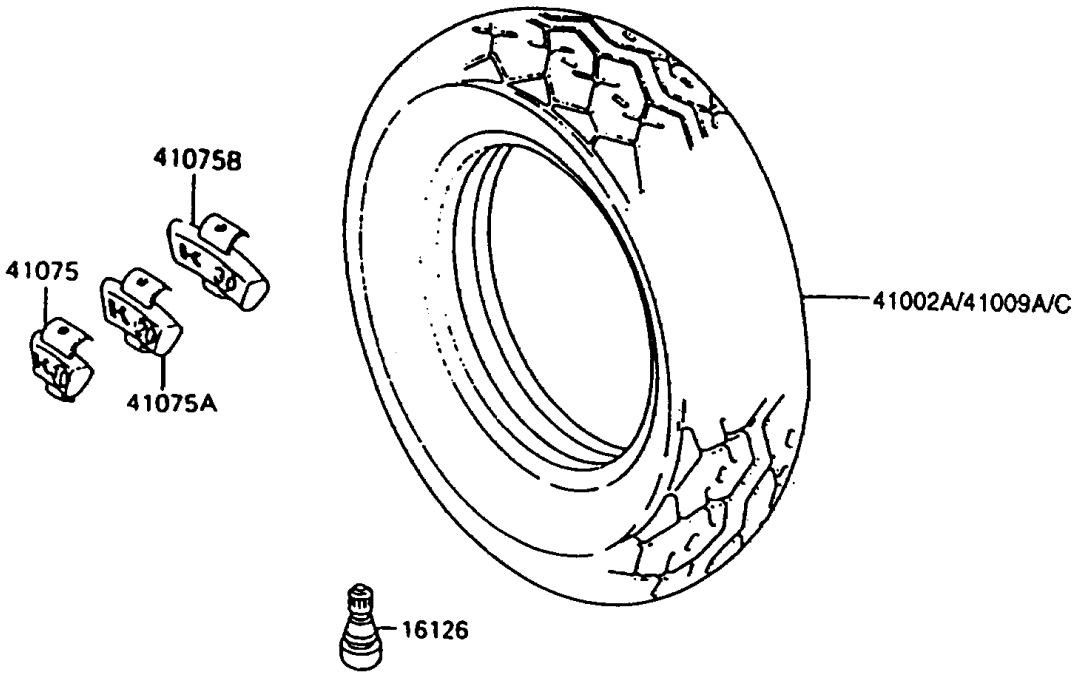

© 2026 Kawasaki Motors Corp., U.S.A.

1995 Vulcan 750

PARTS LIST

Tires

ITEM NAME	PART NUMBER	QUANTITY
VALVE,TIRE (Ref # 16126)	16126-1140	2
TIRE,FR,100/90-19 57H,F11A(D) (Ref # 41009)	41009-1059	1
TIRE,RR,150/90-15 74H,K425(D) (Ref # 41009A)	41009-1060	1
TIRE,FR,100/90-19 57H,L309(BS) (Ref # 41009B)	41009-1100	1
TIRE,RR,150/90-15 74H,G526(BS) (Ref # 41009C)	41009-1101	1
BALANCER-WHEEL,10G,SILVER (Ref # 41075)	41075-1014	AR
BALANCER-WHEEL,20G,SILVER (Ref # 41075A)	41075-1015	AR
BALANCER-WHEEL,30G,SILVER (Ref # 41075B)	41075-1016	AR

© 2026 Kawasaki Motors Corp., U.S.A.