1996 Vulcan 750

PARTS DIAGRAM

Frame

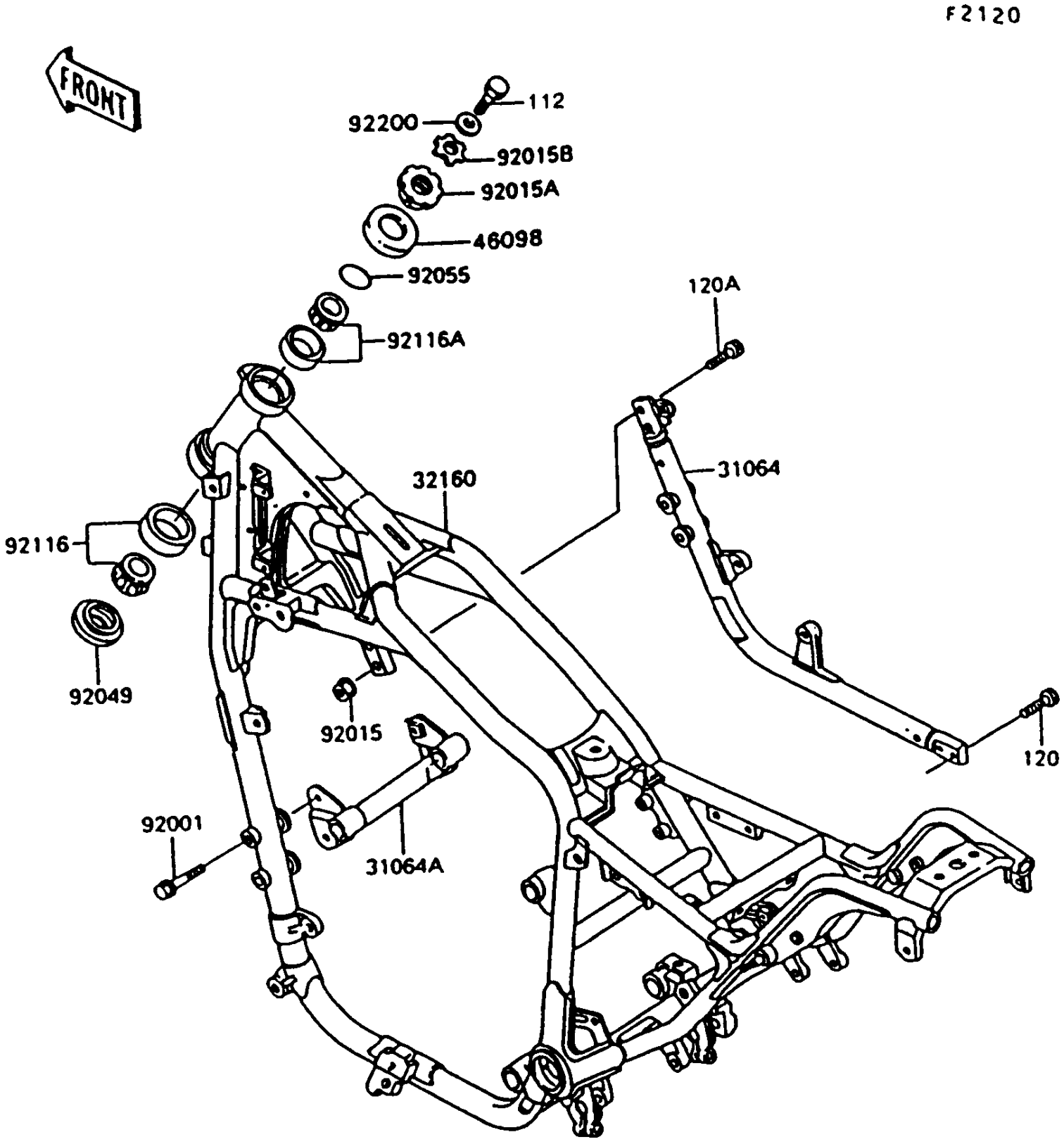

© 2026 Kawasaki Motors Corp., U.S.A.

1996 Vulcan 750

PARTS LIST

Frame

ITEM NAME	PART NUMBER	QUANTITY
BOLT-UPSET (Ref # 112)	112G1425	1
BOLT-SOCKET (Ref # 120)	120S1020	2
BOLT-SOCKET,10X30 (Ref # 120A)	120S1030	2
PIPE-COMP,SUB FRAME (Ref # 31064)	31064-1058	1
PIPE-COMP (Ref # 31064A)	31064-1059	1
FRAME-COMP (Ref # 32160)	32160-1314	1
CAP,STEERING STEM (Ref # 46098)	46098-017	1
BOLT,FLANGED,8X60,BLACK (Ref # 92001)	92001-1615	4
NUT,10MM (Ref # 92015)	92015-1021	2
NUT,25MM,T=10 (Ref # 92015A)	92015-1377	1
NUT,25MM,T=6 (Ref # 92015B)	92015-1378	1
SEAL-OIL,XMHE36X52X4J (Ref # 92049)	92049-1162	1
RING-O,ID=24.5 (Ref # 92055)	92055-1459	1
BEARING-ROLLER,HR320/28XJ (Ref # 92116)	92116-1009	1
BEARING-ROLLER,HI-CAP32005JR (Ref # 92116A)	92116-1058	1
WASHER (Ref # 92200)	92200-1140	1

© 2026 Kawasaki Motors Corp., U.S.A.