1996 Vulcan 750

PARTS DIAGRAM

Cylinder/Piston(s)

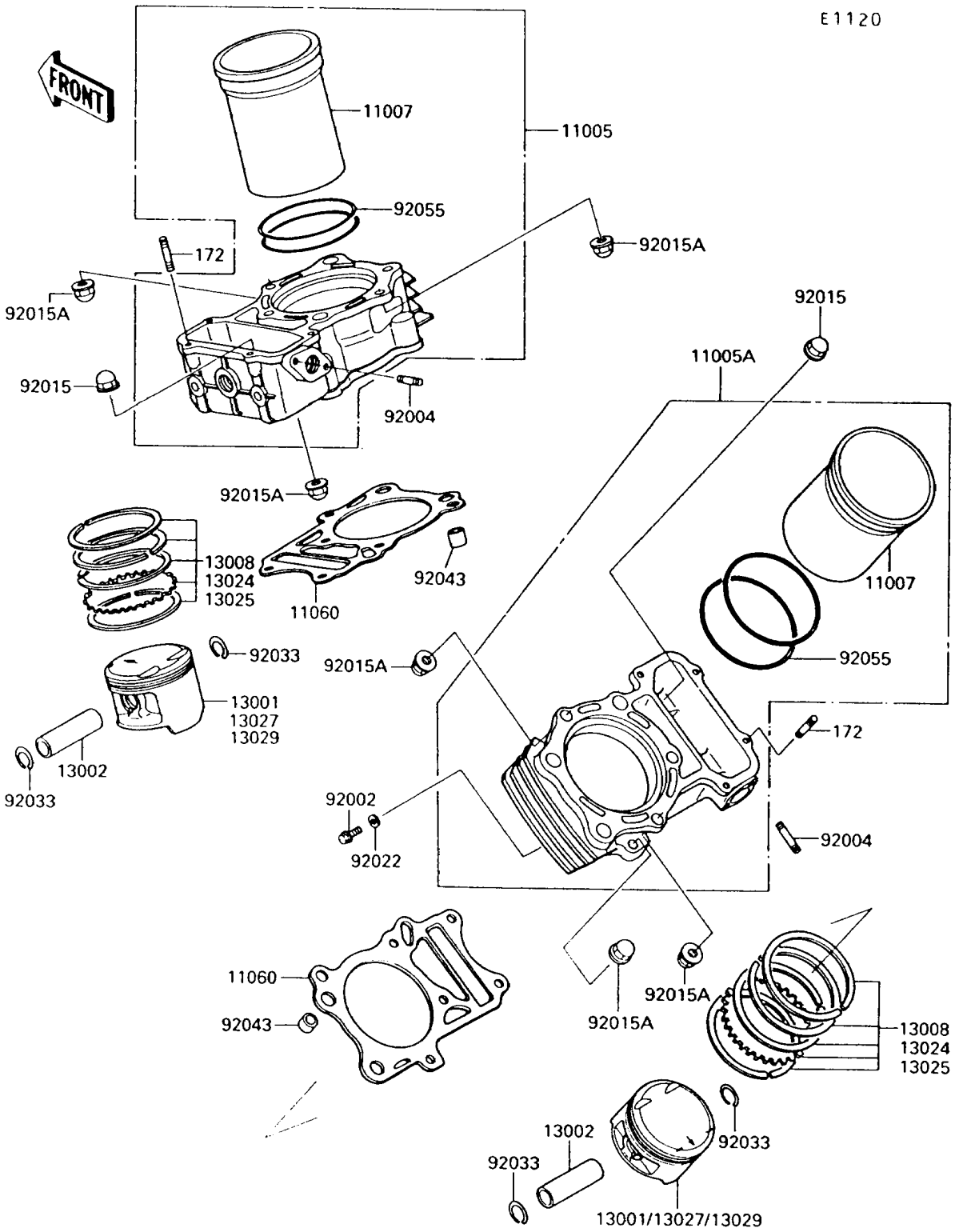

© 2026 Kawasaki Motors Corp., U.S.A.

1996 Vulcan 750

PARTS LIST

Cylinder/Piston(s)

ITEM NAME	PART NUMBER	QUANTITY
BOLT-STUD,6X20 (Ref # 172)	172G0620	4
CYLINDER-ENGINE,FR (Ref # 11005)	11005-1481	1
CYLINDER-ENGINE,RR (Ref # 11005A)	11005-1483	1
LINER-CYLINDER (Ref # 11007)	11007-1073	2
GASKET,CYLINDER BASE (Ref # 11060)	11060-1361	2
PISTON-ENGINE,STD (Ref # 13001)	13001-1215	2
PIN-PISTON (Ref # 13002)	13002-1056	2
RING-SET-PISTON,STD (Ref # 13008)	13008-1077	2
RING-SET-PISTON LL,O/S 1.00 (Ref # 13024)	13024-1069	2
RING-SET-PISTON L,O/S 0.50 (Ref # 13025)	13025-1076	2
PISTON-ENGINE LL,O/S,1.00 (Ref # 13027)	13027-1128	2
PISTON-ENGINE L,O/S,0.50 (Ref # 13029)	13029-1128	2
BOLT,6X10 (Ref # 92002)	92002-1628	2
STUD,6X18 (Ref # 92004)	92004-1154	4
NUT,8MM (Ref # 92015)	92015-1143	4
NUT,CAP,8MM (Ref # 92015A)	92015-1371	6
WASHER,6.1X12X1 (Ref # 92022)	92022-077	2
RING-SNAP (Ref # 92033)	92033-1188	4
PIN,11X14X12.3 (Ref # 92043)	92043-1266	4
RING-O,92MM (Ref # 92055)	92055-1274	4

© 2026 Kawasaki Motors Corp., U.S.A.