1996 Vulcan 750

PARTS DIAGRAM

Cylinder Head Cover

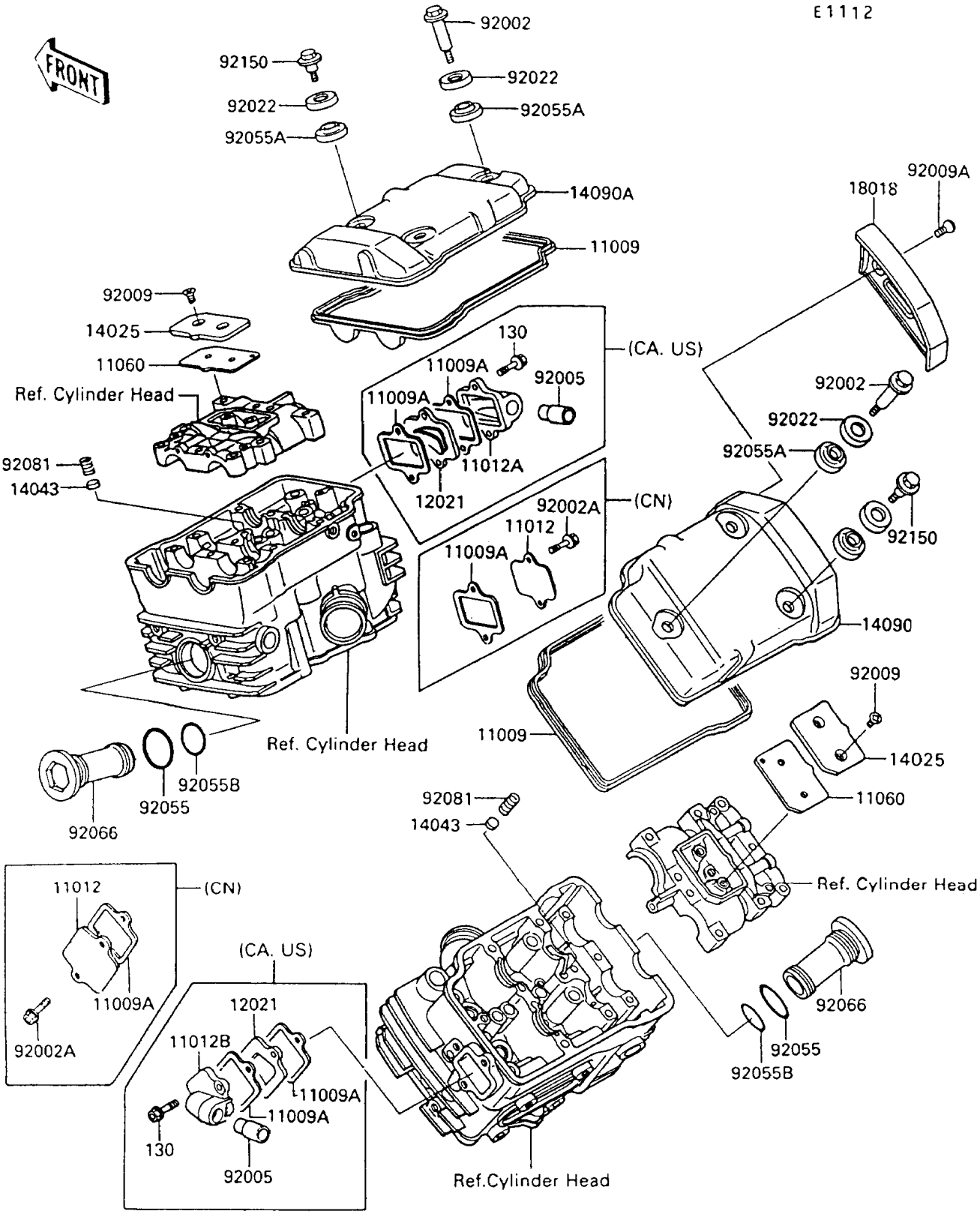

© 2026 Kawasaki Motors Corp., U.S.A.

1996 Vulcan 750

PARTS LIST

Cylinder Head Cover

ITEM NAME	PART NUMBER	QUANTITY
BOLT-FLANGED (Ref # 130)	130N0620	4
GASKET,CYLINDER HEAD COVER (Ref # 11009)	11009-1508	2
GASKET,REED VALVE (Ref # 11009A)	11009-1879	4
CAP,REED VALVE,FR (Ref # 11012A)	11012-1494	1
CAP,REED VALVE,RR (Ref # 11012B)	11012-1495	1
GASKET,SEPARATER COVER (Ref # 11060)	11060-1083	2
VALVE-ASSY-REED (Ref # 12021)	12021-1011	2
COVER,SEPARATER (Ref # 14025)	14025-1738	2
FILTER,OIL (Ref # 14043)	14043-1056	2
COVER,CYLINDER HEAD,RR (Ref # 14090)	14090-1400	1
COVER,CYLINDER HEAD,FR (Ref # 14090A)	14090-1401	1
PLATE-HEAT GUARD (Ref # 18018)	18018-1063	1
BOLT (Ref # 92002)	92002-1421	2
FITTING,REED VALVE (Ref # 92005)	92005-1006	2
SCREW,6X10 (Ref # 92009)	92009-1363	4
SCREW,6X16 (Ref # 92009A)	92009-3703	2
WASHER,HEAD COVER BOLT (Ref # 92022)	92022-1637	6
RING-O,31.5X2.6 (Ref # 92055)	92055-049	2
RING-O,HEAD COVER BOLT (Ref # 92055A)	92055-1225	6
RING-O,27.7X1.9 (Ref # 92055B)	92055-1272	2
PLUG,CYLINDER HEAD (Ref # 92066)	92066-1224	2
SPRING,OIL FILTER (Ref # 92081)	92081-1776	2
BOLT,HEAD COVER (Ref # 92150)	92150-1447	4

© 2026 Kawasaki Motors Corp., U.S.A.