# 2006 Vulcan 2000 Classic LT

## PARTS DIAGRAM

### Gear Change Drum/Shift Fork(s)

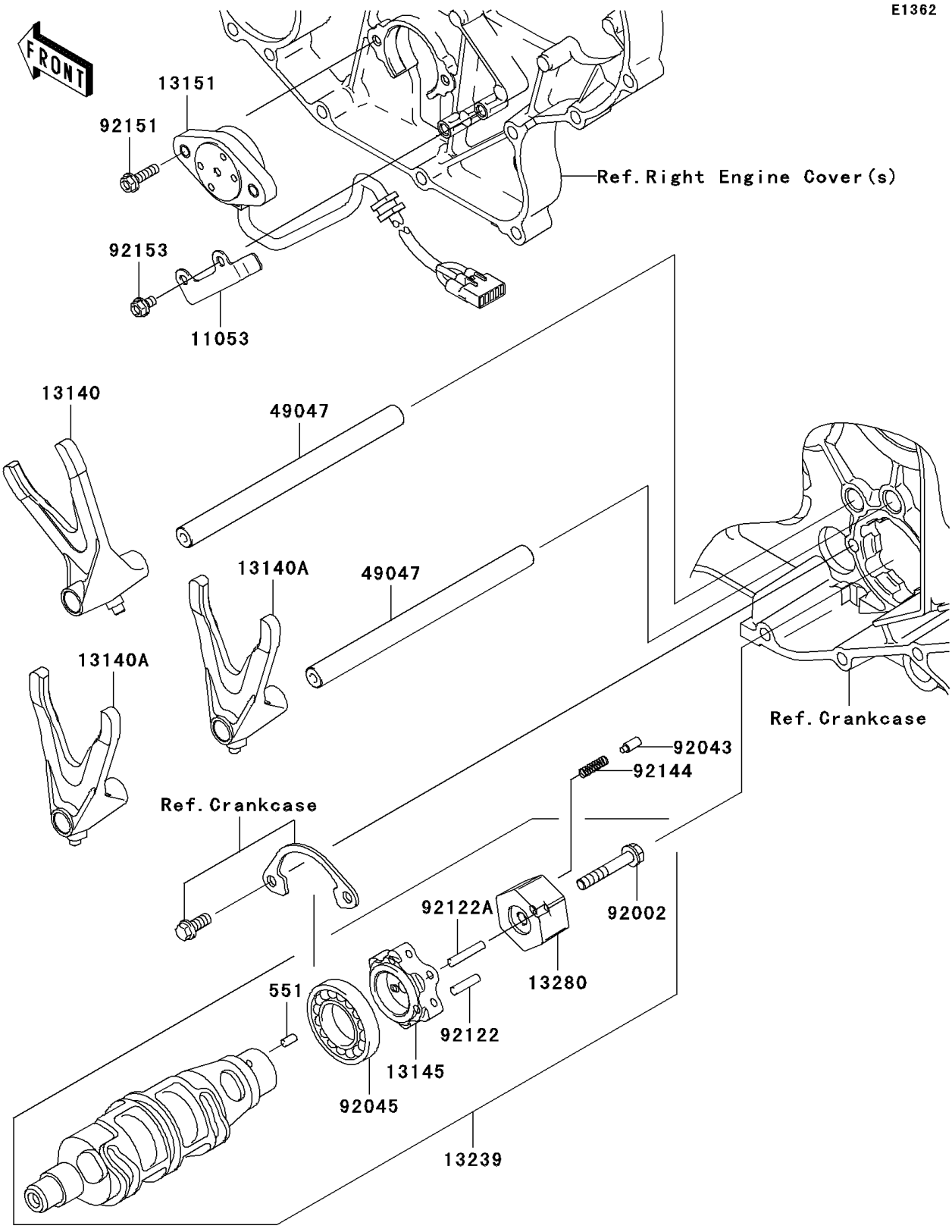


© 2026 Kawasaki Motors Corp., U.S.A.

# 2006 Vulcan 2000 Classic LT

## PARTS LIST

### Gear Change Drum/Shift Fork(s)

| ITEM NAME | PART NUMBER | QUANTITY |
|---|---|---|
| PIN-DOWEL,4X8 (Ref # 551) | 551A0408 | 1 |
| BRACKET,SENSOR WIRE (Ref # 11053) | 11053-0506 | 1 |
| FORK-SHIFT,INPUT (Ref # 13140) | 13140-0001 | 1 |
| FORK-SHIFT,OUTPUT (Ref # 13140A) | 13140-0002 | 2 |
| CAM-CHANGE DRUM (Ref # 13145) | 13145-0016 | 1 |
| SWITCH-COMP,GEAR POSITION (Ref # 13151) | 13151-0013 | 1 |
| DRUM-ASSY-CHANGE (Ref # 13239) | 13239-0013 | 1 |
| HOLDER (Ref # 13280) | 13280-0106 | 1 |
| ROD-SHIFT (Ref # 49047) | 49047-0002 | 2 |
| BOLT,6X38 (Ref # 92002) | 92002-1431 | 1 |
| PIN (Ref # 92043) | 92043-0085 | 1 |
| BEARING-BALL,16005(NTN) (Ref # 92045) | 92045-1045 | 1 |
| ROLLER,4.5X17.8 (Ref # 92122) | 92122-0001 | 5 |
| ROLLER,4.5X23.8 (Ref # 92122A) | 92122-0010 | 1 |
| SPRING (Ref # 92144) | 92144-1245 | 1 |
| BOLT (Ref # 92151) | 92151-1776 | 2 |
| BOLT,5X10 (Ref # 92153) | 92153-0687 | 2 |

© 2026 Kawasaki Motors Corp., U.S.A.