2022 NINJA H2®

PARTS DIAGRAM

Crankcase

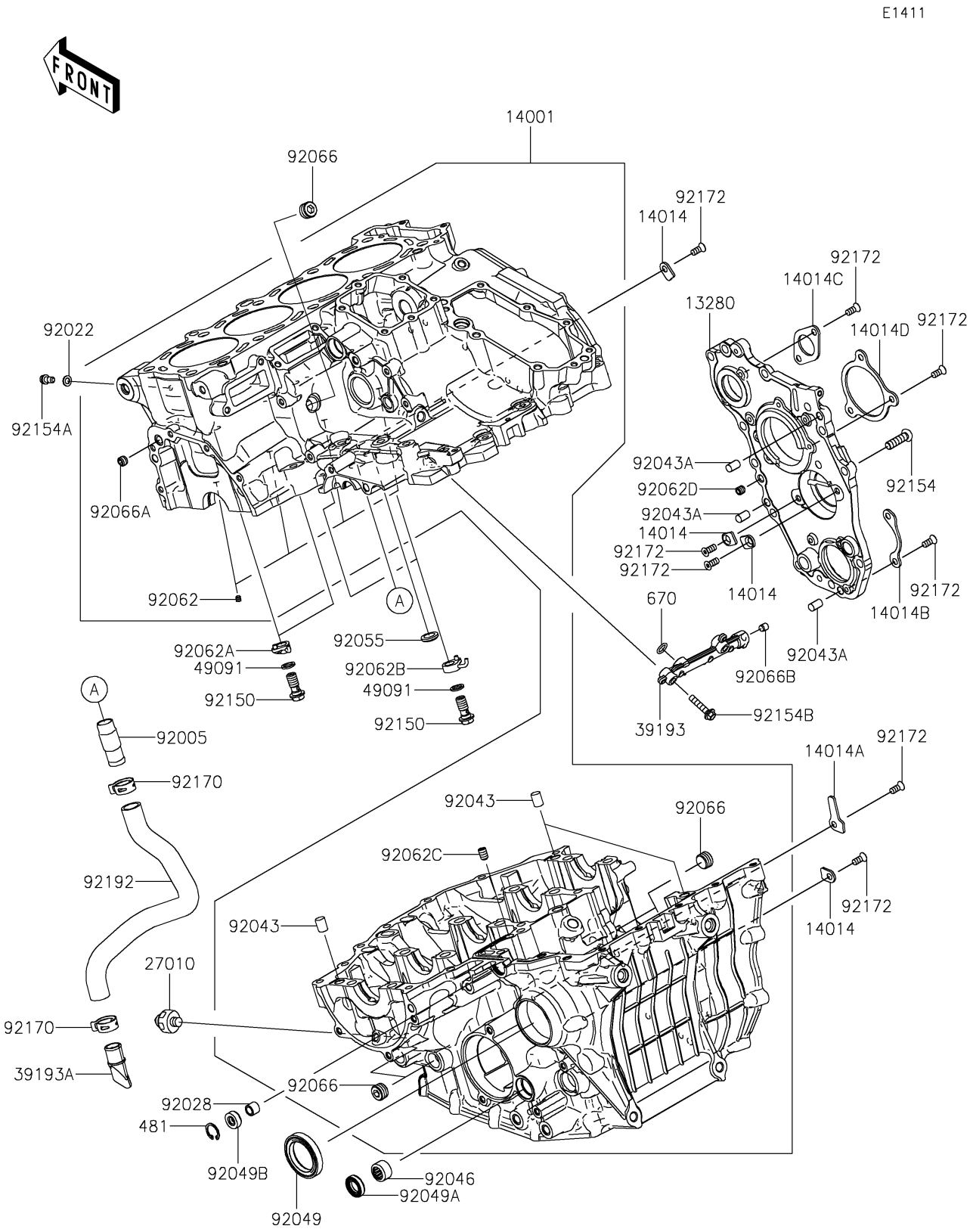

© 2026 Kawasaki Motors Corp., U.S.A.

2022 NINJA H2®

PARTS LIST

Crankcase

Kawasaki
Let the Good Times Roll®

ITEM NAME	PART NUMBER	QUANTITY
HOLDER,TRANSMISSION (Ref # 13280)	13280-0799	1
SET-CRANKCASE (Ref # 14001)	14001-0673	1
PLATE-POSITION (Ref # 14014)	14014-0569	4
PLATE-POSITION (Ref # 14014A)	14014-0570	1
PLATE-POSITION,CHANGE DRUM (Ref # 14014B)	14014-0571	1
PLATE-POSITION,COUNTER SHAFT (Ref # 14014C)	14014-0572	1
PLATE-POSITION (Ref # 14014D)	14014-0575	1
SWITCH,OIL PRESSURE (Ref # 27010)	27010-1313	1
PIPE-OIL (Ref # 39193)	39193-0581	1
PIPE-OIL (Ref # 39193A)	39193-0582	1
WASHER-SEAL,10.1X14.5X1.5 (Ref # 49091)	49091-0001	4
FITTING (Ref # 92005)	92005-0773	1
WASHER,6.2X11X1 (Ref # 92022)	92022-304	1
BUSHING,8X12X10 (Ref # 92028)	92028-1750	1
PIN,10X14 (Ref # 92043)	92043-1506	3
PIN,8X14 (Ref # 92043A)	92043-1567	3
BEARING-NEEDLE,HK1412FM (Ref # 92046)	92046-0043	1
SEAL-OIL,TC 35X50X8 (Ref # 92049)	92049-1452	1
SEAL-OIL,TC14245 (Ref # 92049A)	92049-1520	1
SEAL-OIL (Ref # 92049B)	92049-1566	1
RING-O (Ref # 92055)	92055-0832	1
NOZZLE (Ref # 92062)	92062-0004	4
NOZZLE (Ref # 92062A)	92062-0027	2
NOZZLE (Ref # 92062B)	92062-0028	2
NOZZLE (Ref # 92062C)	92062-0031	1
NOZZLE (Ref # 92062D)	92062-0032	1
PLUG (Ref # 92066)	92066-0831	5
PLUG,PT1/8X7 (Ref # 92066A)	92066-0876	1
PLUG,OIL LINE,7.2X8 (Ref # 92066B)	92066-1012	1

© 2026 Kawasaki Motors Corp., U.S.A.

2022 NINJA H2®

PARTS LIST

Crankcase

ITEM NAME	PART NUMBER	QUANTITY
BOLT,BANJO,10X23 (Ref # 92150)	92150-1641	4
BOLT,TORX,8X28 (Ref # 92154)	92154-0415	12
BOLT,SOCKET,6X12 (Ref # 92154A)	92154-1453	1
BOLT,FLANGED,6X28 (Ref # 92154B)	92154-1845	2
CLAMP (Ref # 92170)	92170-1640	2
SCREW,TORX,6X14 (Ref # 92172)	92172-0906	12
TUBE,BREATHER DRAIN (Ref # 92192)	92192-1437	1
CIRCLIP-TYPE-C,18MM (Ref # 481)	481J1800	1
O RING,9.8X1.9 (Ref # 670)	670B1510	1

© 2026 Kawasaki Motors Corp., U.S.A.