2006 Vulcan 2000 Limited

PARTS DIAGRAM

Oil Pump

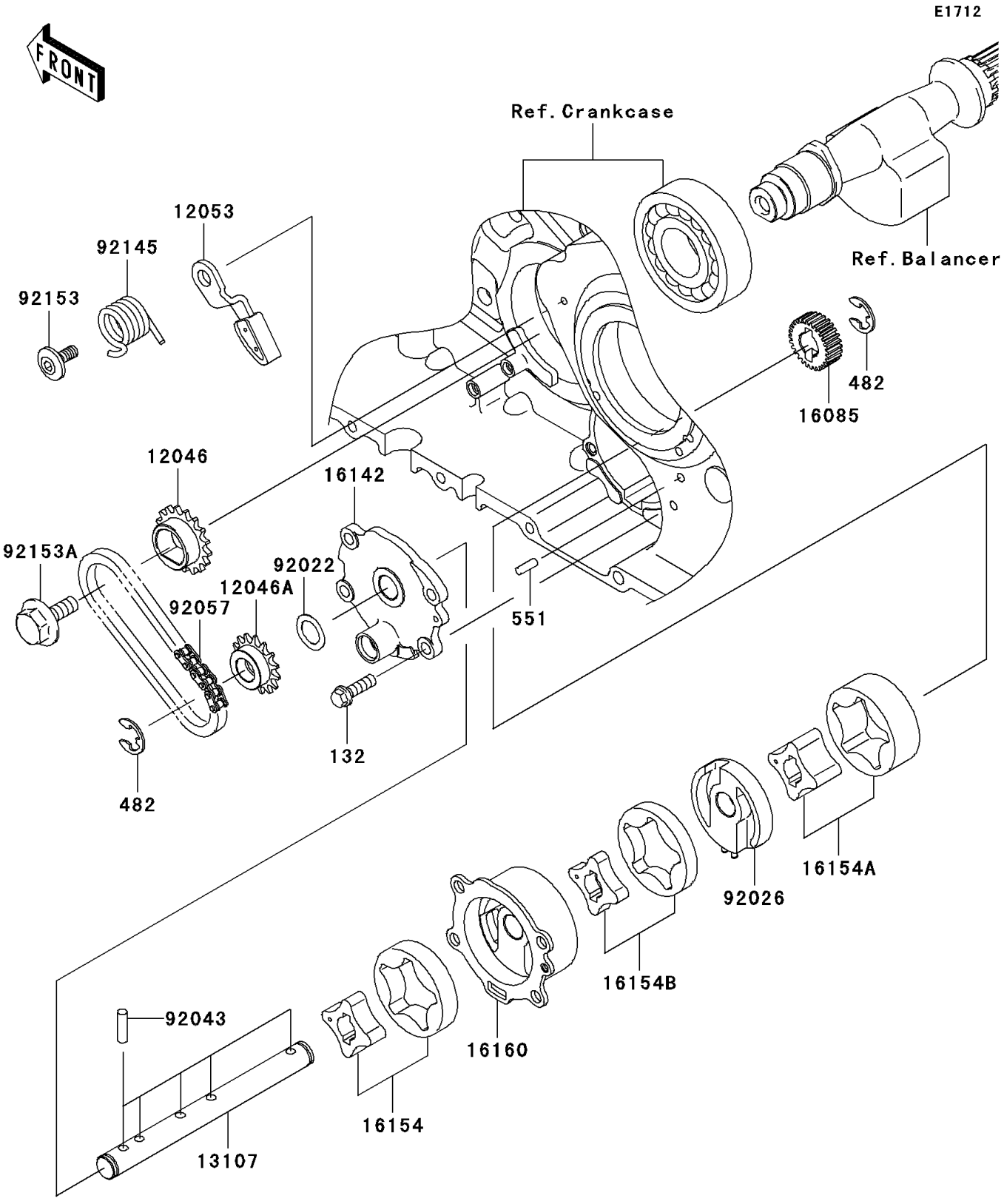

© 2026 Kawasaki Motors Corp., U.S.A.

2006 Vulcan 2000 Limited

PARTS LIST

Oil Pump

ITEM NAME	PART NUMBER	QUANTITY
BOLT-FLANGED-SMALL,6X20 (Ref # 132)	132G0620	4
CIRCLIP-TYPE-E,10MM (Ref # 482)	482J0100	2
PIN-DOWEL (Ref # 551)	551A0412	1
SPROCKET,DRIVE,17T (Ref # 12046)	12046-0010	1
SPROCKET,15T (Ref # 12046A)	12046-0011	1
GUIDE-CHAIN (Ref # 12053)	12053-0005	1
SHAFT (Ref # 13107)	13107-0007	1
GEAR,OIL PUMP,27T (Ref # 16085)	16085-0006	1
COVER-PUMP (Ref # 16142)	16142-0014	1
ROTOR-PUMP,FEED (Ref # 16154)	16154-0001	1
ROTOR-PUMP,SCAVENGE OILPAN (Ref # 16154A)	16154-0004	1
ROTOR-PUMP,SCAVENGE CLUTCH (Ref # 16154B)	16154-0013	1
BODY,OIL PUMP (Ref # 16160)	16160-0002	1
WASHER,13.2X20X0.5 (Ref # 92022)	92022-1224	1
SPACER (Ref # 92026)	92026-0039	1
PIN,17.9X5.0 (Ref # 92043)	92043-1444	5
CHAIN,DID25FH (Ref # 92057)	92057-0029	1
SPRING (Ref # 92145)	92145-0036	1
BOLT,6X15.4 (Ref # 92153)	92153-0322	1
BOLT,FLANGED,8X23 (Ref # 92153A)	92153-0549	1

© 2026 Kawasaki Motors Corp., U.S.A.