2006 Vulcan 2000 Limited

PARTS DIAGRAM

Oil Pan

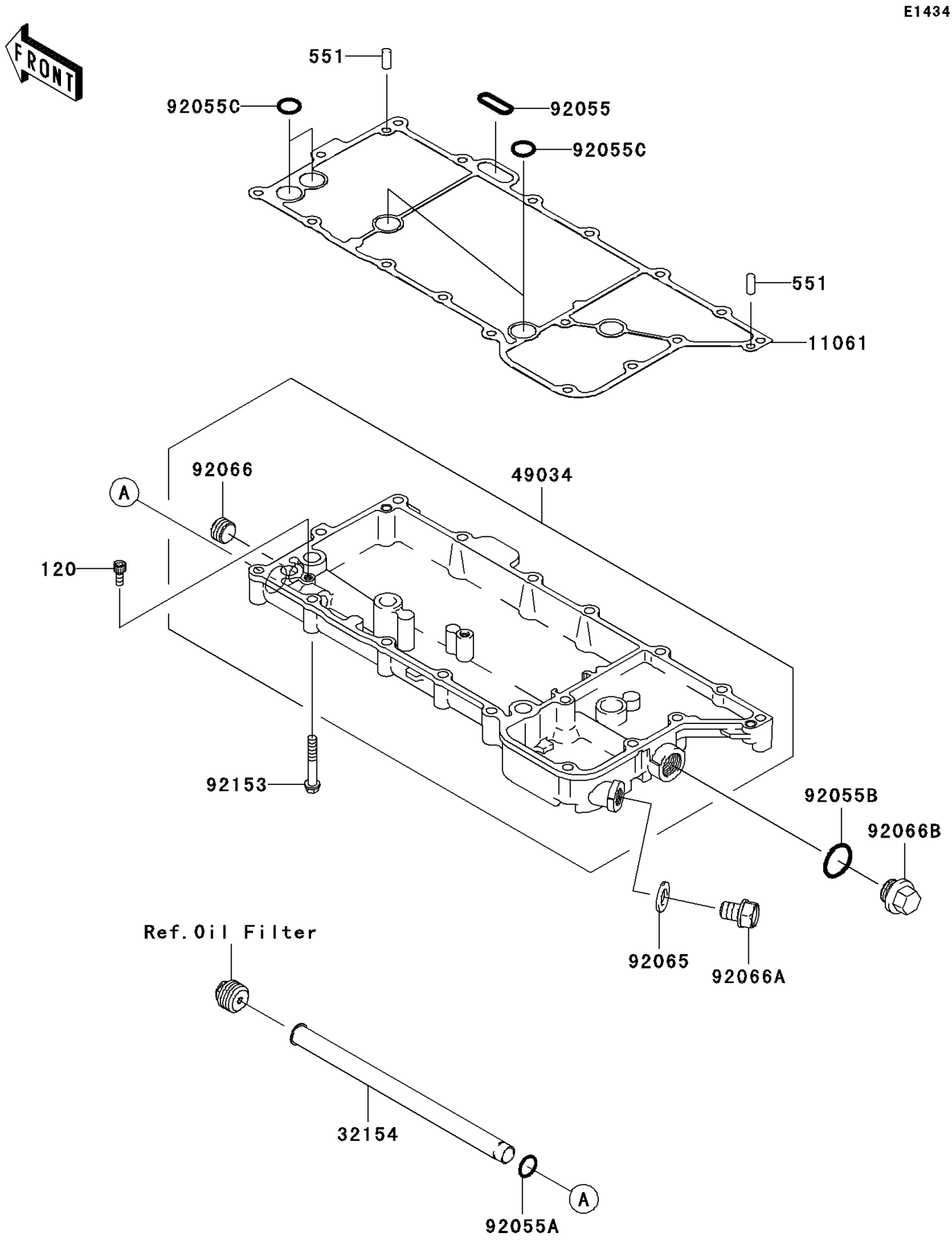

© 2026 Kawasaki Motors Corp., U.S.A.

2006 Vulcan 2000 Limited

PARTS LIST

Oil Pan

ITEM NAME	PART NUMBER	QUANTITY
BOLT-SOCKET,5X12 (Ref # 120)	120S0512	1
PIN-DOWEL,6X14 (Ref # 551)	551A0614	2
GASKET,OIL PAN (Ref # 11061)	11061-0021	1
PIPE (Ref # 32154)	32154-0065	1
PAN-OIL (Ref # 49034)	49034-0012	1
RING-O (Ref # 92055)	92055-0009	1
RING-O,ID=13.8 (Ref # 92055A)	92055-1141	1
RING-O,20X2 (Ref # 92055B)	92055-1146	1
RING-O,13.2X2.4 (Ref # 92055C)	92055-1373	4
GASKET,12X22X2 (Ref # 92065)	92065-097	1
PLUG (Ref # 92066)	92066-0042	1
PLUG,OIL DRAIN,12X15 (Ref # 92066A)	92066-1174	1
PLUG,MAIN GALLERY,18X9 (Ref # 92066B)	92066-1394	1
BOLT,6X40 (Ref # 92153)	92153-0710	17

© 2026 Kawasaki Motors Corp., U.S.A.