2022 Z900 ABS

PARTS DIAGRAM

Seat Cover

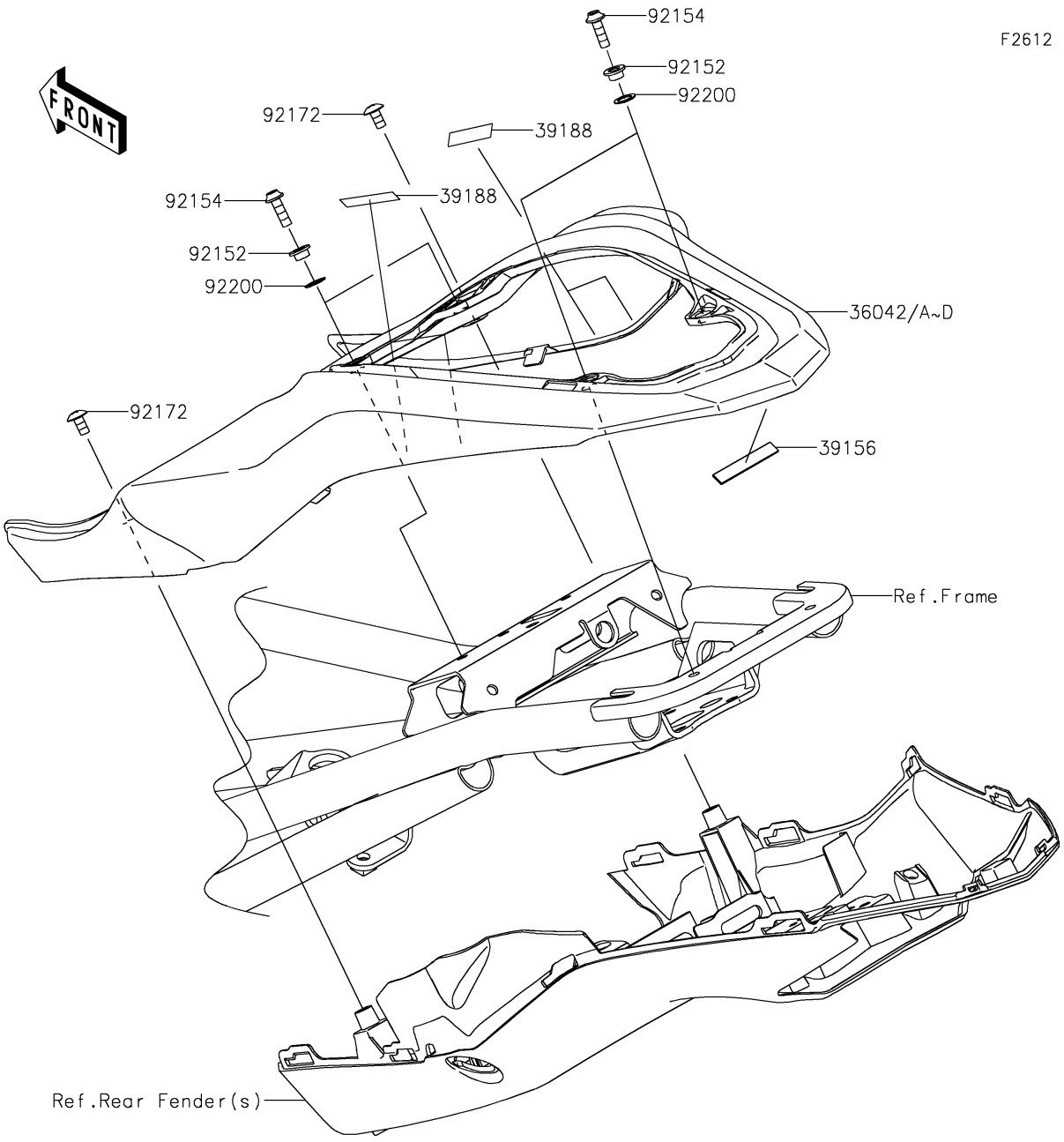

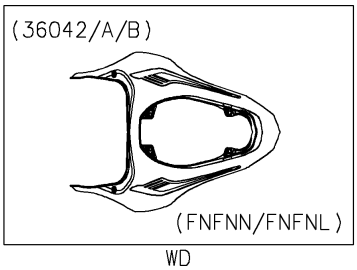

WD

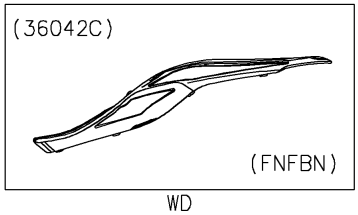

WD

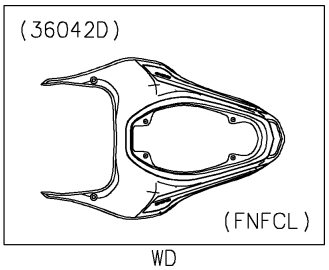

WD

© 2026 Kawasaki Motors Corp., U.S.A.

2022 Z900 ABS

PARTS LIST

Seat Cover

ITEM NAME	PART NUMBER	QUANTITY
COVER-TAIL,M.S.BLACK (Ref # 36042)	36042-5258-660	1
COVER-TAIL,M.S.BLACK (Ref # 36042A)	36042-5305-660	1
COVER-TAIL,M.S.BLACK (Ref # 36042B)	36042-5307-660	1
PAD,7X44X1 (Ref # 39156)	39156-2181	1
TAPE,8X35 (Ref # 39188)	39188-0564	4
COLLAR,5.6X8X5 (Ref # 92152)	92152-2339	4
BOLT,SOCKET,5X16 (Ref # 92154)	92154-0209	4
SCREW,5X10 (Ref # 92172)	92172-1194	2
WASHER,8.2X12X0.5 (Ref # 92200)	92200-1887	4

© 2026 Kawasaki Motors Corp., U.S.A.