2022 Z900 ABS

PARTS DIAGRAM

Front Brake

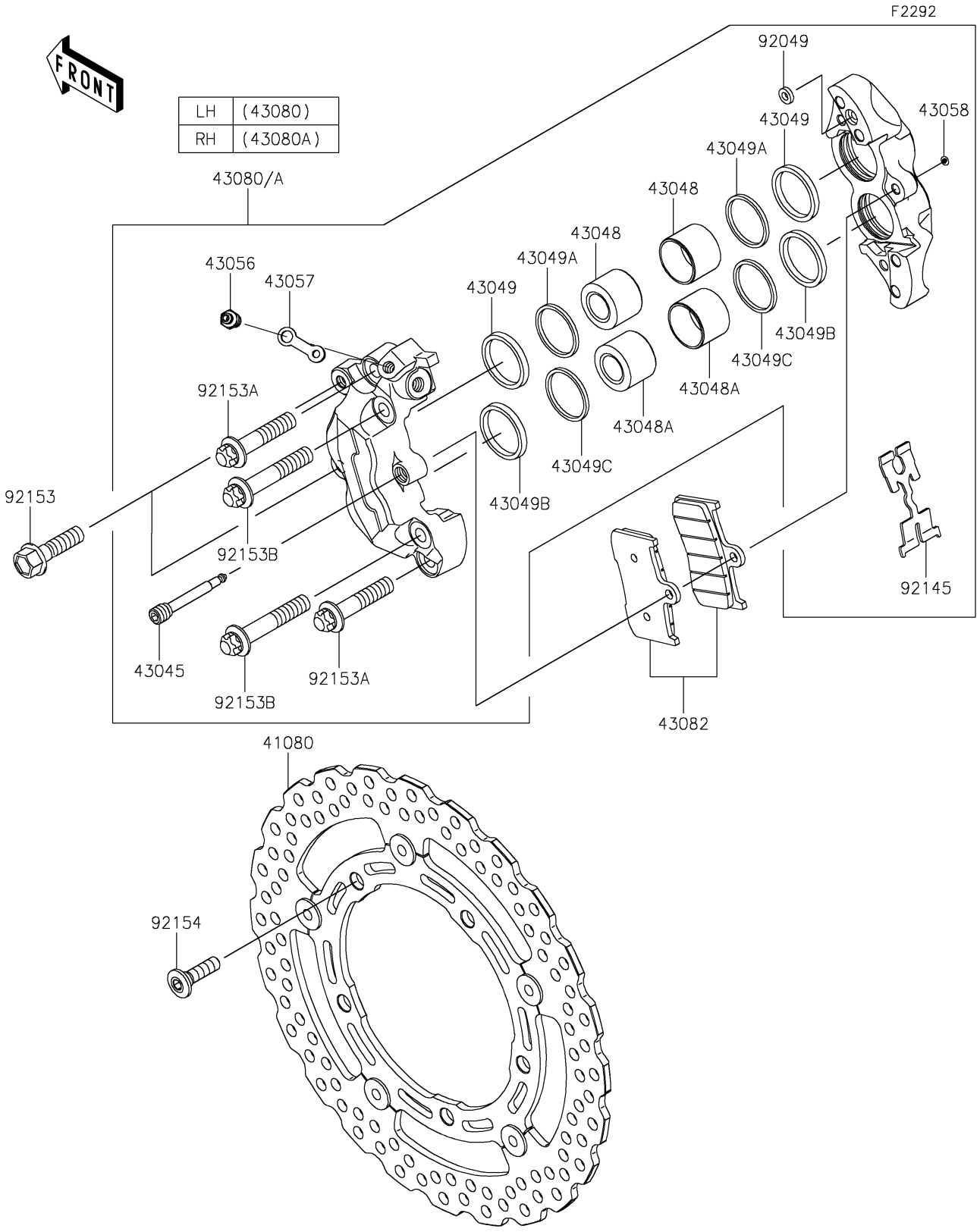

© 2026 Kawasaki Motors Corp., U.S.A.

2022 Z900 ABS

PARTS LIST

Front Brake

ITEM NAME	PART NUMBER	QUANTITY
DISC,FR,BLACK+SIL (Ref # 41080)	41080-0710-11I	2
SHAFT-CALIPER (Ref # 43045)	43045-1053	2
PISTON-CALIPER (Ref # 43048)	43048-0001	4
PISTON-CALIPER (Ref # 43048A)	43048-0021	4
PACKING (Ref # 43049)	43049-0006	4
PACKING (Ref # 43049A)	43049-0007	4
PACKING (Ref # 43049B)	43049-0030	4
PACKING (Ref # 43049C)	43049-0031	4
BREATHER (Ref # 43056)	43056-1055	2
CAP-BREATHER (Ref # 43057)	43057-1001	2
RING,STOPPER (Ref # 43058)	43058-1100	2
CALIPER-SUB-ASSY,FR,LH,BLACK (Ref # 43080)	43080-0130-DJ	1
CALIPER-SUB-ASSY,FR,RH,BLACK (Ref # 43080A)	43080-0131-DJ	1
PAD-ASSY-BRAKE (Ref # 43082)	43082-0195	2
SEAL-OIL (Ref # 92049)	92049-1448	2
SPRING,PAD (Ref # 92145)	92145-0184	2
BOLT,FLANGED,8X30 (Ref # 92153)	92153-1089	4
BOLT,TORX,8X38 (Ref # 92153A)	92153-1093	4
BOLT,TORX,8X45 (Ref # 92153B)	92153-1094	4
BOLT,SOCKET,8X30 (Ref # 92154)	92154-1865	10

© 2026 Kawasaki Motors Corp., U.S.A.