# 2022 Z900 ABS

## PARTS DIAGRAM

### Rear Wheel/Chain

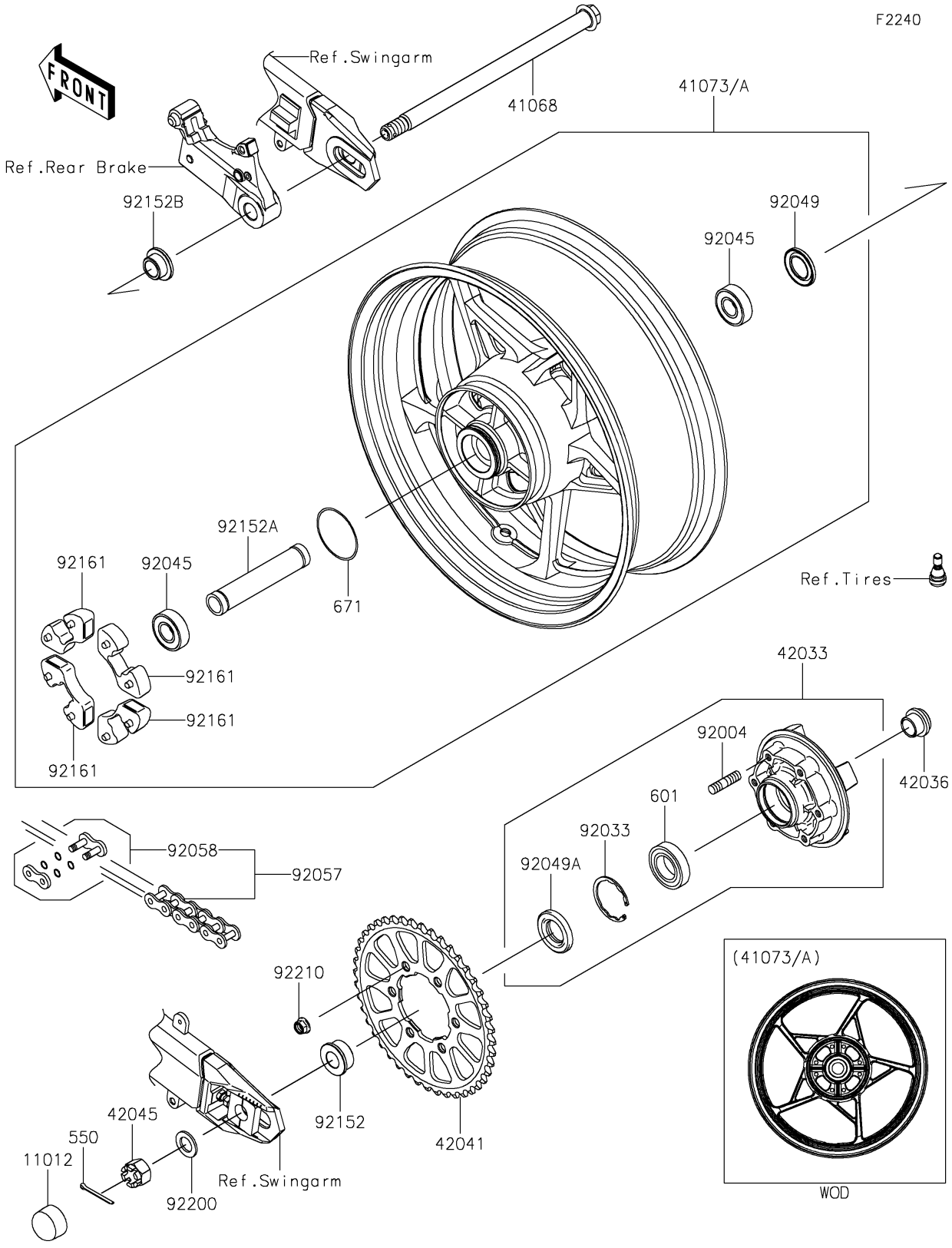


© 2026 Kawasaki Motors Corp., U.S.A.

# 2022 Z900 ABS

## PARTS LIST

### Rear Wheel/Chain

| ITEM NAME | PART NUMBER | QUANTITY |
|---|---|---|
| CAP,AXLE NUT (Ref # 11012) | 11012-1590 | 1 |
| AXLE,RR,18X327.2 (Ref # 41068) | 41068-0619 | 1 |
| WHEEL-ASSY,RR,G.BLACK (Ref # 41073A) | 41073-0706-QT | 1 |
| COUPLING-ASSY,RR HUB (Ref # 42033) | 42033-0028 | 1 |
| SLEEVE,RR HUB,L=23 (Ref # 42036) | 42036-1251 | 1 |
| SPROCKET-HUB,44T (Ref # 42041) | 42041-0158 | 1 |
| NUT,CASTLE,18MM (Ref # 42045) | 42045-018 | 1 |
| STUD,10X19 (Ref # 92004) | 92004-0028 | 6 |
| RING-SNAP,52MM (Ref # 92033) | 92033-1043 | 1 |
| BEARING-BALL,20X47X14 (Ref # 92045) | 92045-0821 | 2 |
| SEAL-OIL,28 47 5 (Ref # 92049) | 92049-0140 | 1 |
| SEAL-OIL (Ref # 92049A) | 92049-1287 | 1 |
| CHAIN,DRIVE,EK525RMX3/3D,114L (Ref # 92057) | 92057-0672 | 1 |
| JOINT-CHAIN (Ref # 92058) | 92058-0041 | 1 |
| COLLAR,RR AXLE,LH,L=18 (Ref # 92152) | 92152-0118 | 1 |
| COLLAR,20.2X27.2X141.9 (Ref # 92152A) | 92152-2250 | 1 |
| COLLAR,RR AXLE,RH,L=16.4 (Ref # 92152B) | 92152-2698 | 1 |
| DAMPER,SHOCK,RR HUB (Ref # 92161) | 92161-0342 | 4 |
| WASHER,19X32X2.6 (Ref # 92200) | 92200-1489 | 1 |
| NUT,LOCK,FLANGED,10MM (Ref # 92210) | 92210-0276 | 6 |
| PIN-COTTER,4.0X40 (Ref # 550) | 550AA4040 | 1 |
| BEARING-BALL (Ref # 601) | 601B6205UU | 1 |
| O RING,60MM (Ref # 671) | 671B2560 | 1 |

© 2026 Kawasaki Motors Corp., U.S.A.