2022 Z900 ABS

PARTS DIAGRAM

Rear Wheel/Chain

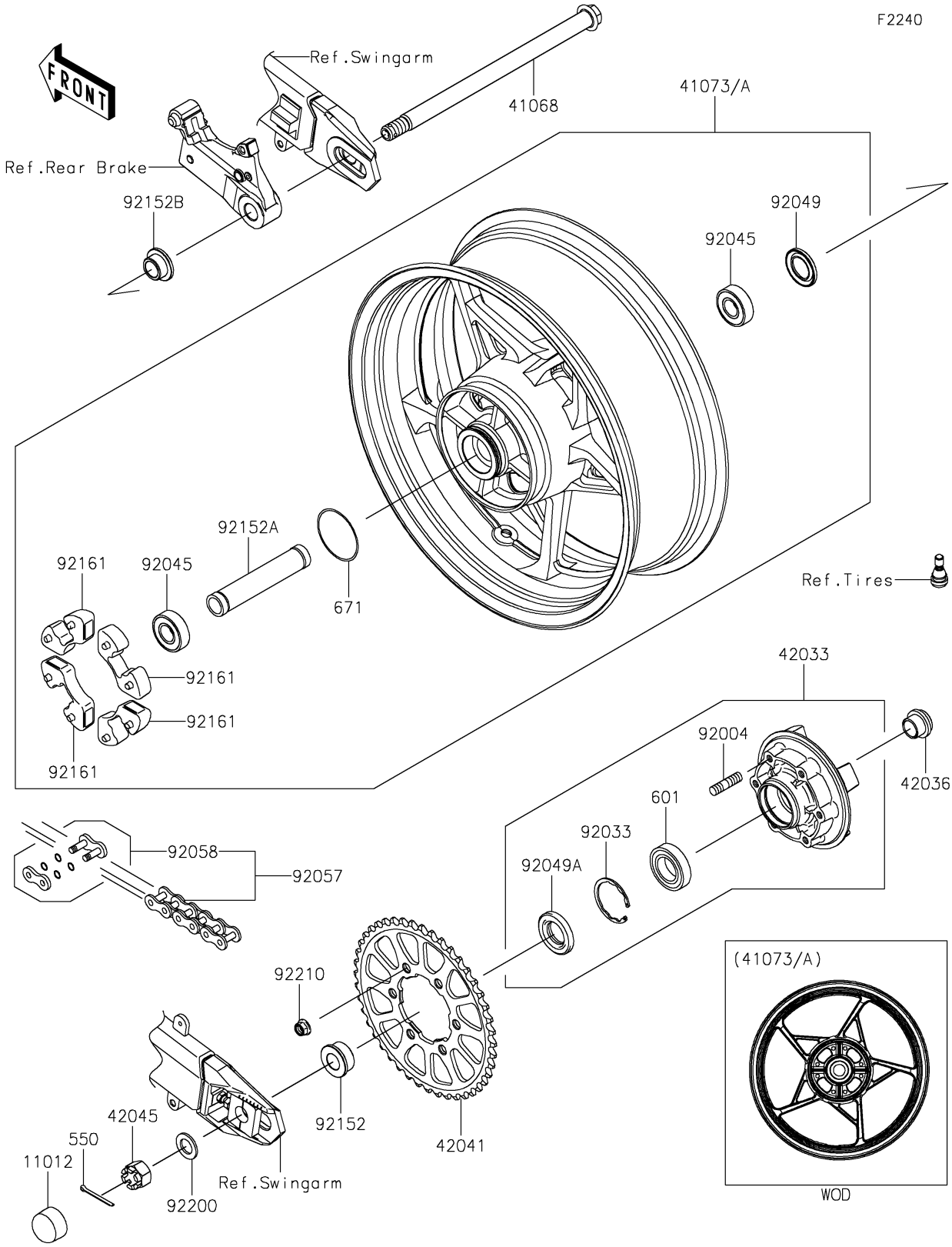

© 2026 Kawasaki Motors Corp., U.S.A.

2022 Z900 ABS

PARTS LIST

Rear Wheel/Chain

ITEM NAME	PART NUMBER	QUANTITY
CAP,AXLE NUT (Ref # 11012)	11012-1590	1
AXLE,RR,18X327.2 (Ref # 41068)	41068-0619	1
WHEEL-ASSY,RR,G.BLACK (Ref # 41073A)	41073-0706-QT	1
COUPLING-ASSY,RR HUB (Ref # 42033)	42033-0028	1
SLEEVE,RR HUB,L=23 (Ref # 42036)	42036-1251	1
SPROCKET-HUB,44T (Ref # 42041)	42041-0158	1
NUT,CASTLE,18MM (Ref # 42045)	42045-018	1
STUD,10X19 (Ref # 92004)	92004-0028	6
RING-SNAP,52MM (Ref # 92033)	92033-1043	1
BEARING-BALL,20X47X14 (Ref # 92045)	92045-0821	2
SEAL-OIL,28 47 5 (Ref # 92049)	92049-0140	1
SEAL-OIL (Ref # 92049A)	92049-1287	1
CHAIN,DRIVE,EK525RMX3/3D,114L (Ref # 92057)	92057-0672	1
JOINT-CHAIN (Ref # 92058)	92058-0041	1
COLLAR,RR AXLE,LH,L=18 (Ref # 92152)	92152-0118	1
COLLAR,20.2X27.2X141.9 (Ref # 92152A)	92152-2250	1
COLLAR,RR AXLE,RH,L=16.4 (Ref # 92152B)	92152-2698	1
DAMPER,SHOCK,RR HUB (Ref # 92161)	92161-0342	4
WASHER,19X32X2.6 (Ref # 92200)	92200-1489	1
NUT,LOCK,FLANGED,10MM (Ref # 92210)	92210-0276	6
PIN-COTTER,4.0X40 (Ref # 550)	550AA4040	1
BEARING-BALL (Ref # 601)	601B6205UU	1
O RING,60MM (Ref # 671)	671B2560	1

© 2026 Kawasaki Motors Corp., U.S.A.