2022 Z900 ABS

PARTS DIAGRAM

Ignition System

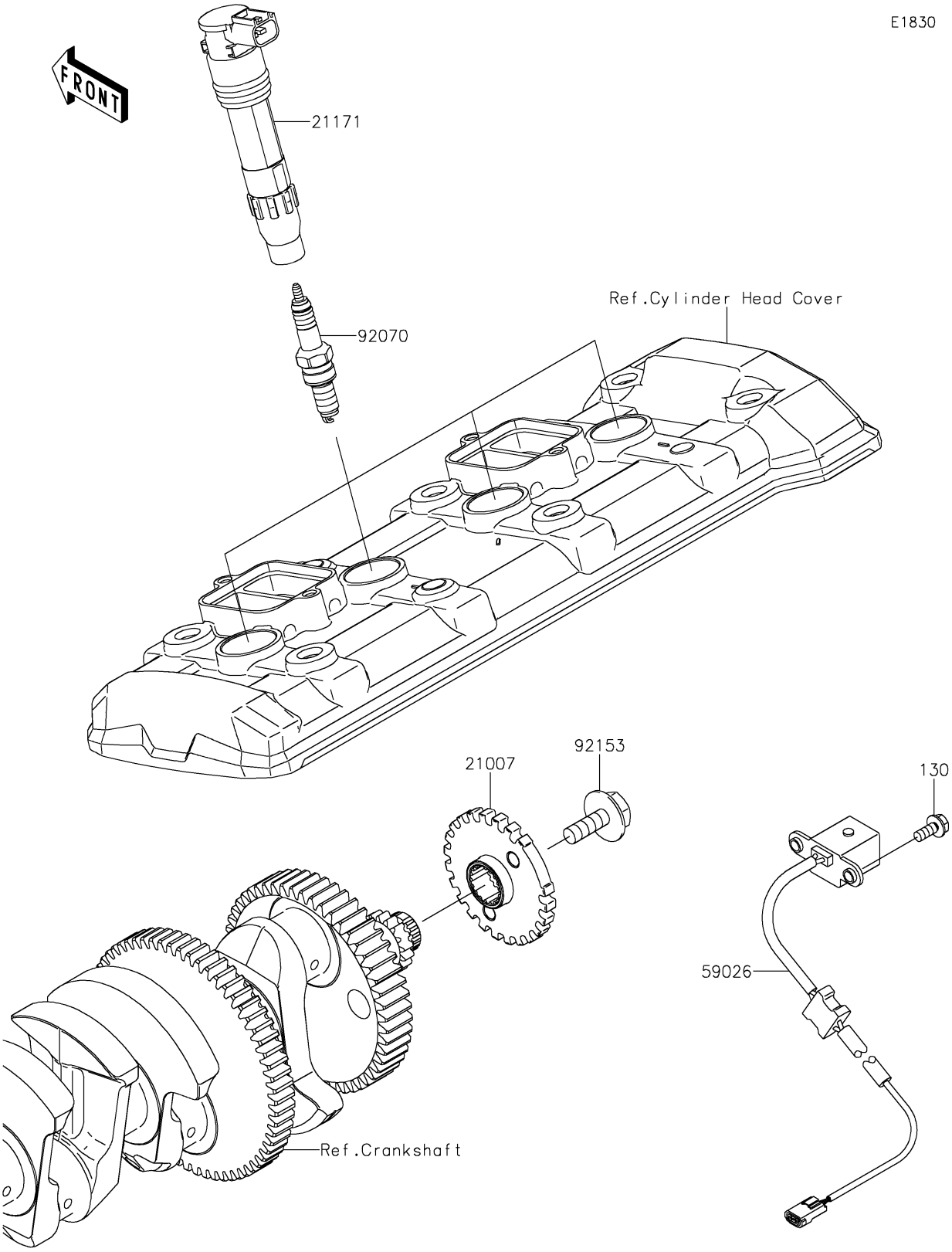

© 2026 Kawasaki Motors Corp., U.S.A.

2022 Z900 ABS

PARTS LIST

Ignition System

ITEM NAME	PART NUMBER	QUANTITY
ROTOR (Ref # 21007)	21007-0579	1
COIL-ASSY-IGNITION (Ref # 21171)	21171-0033	4
COIL-PULSING (Ref # 59026)	59026-0049	1
PLUG-SPARK,CR9EIA(NGK) (Ref # 92070)	92070-0014	4
BOLT,FLANGED,8X23 (Ref # 92153)	92153-0549	1
BOLT-FLANGED,5X12 (Ref # 130)	130BA0512	2

© 2026 Kawasaki Motors Corp., U.S.A.