2022 KX™450

PARTS DIAGRAM

Water Pipe

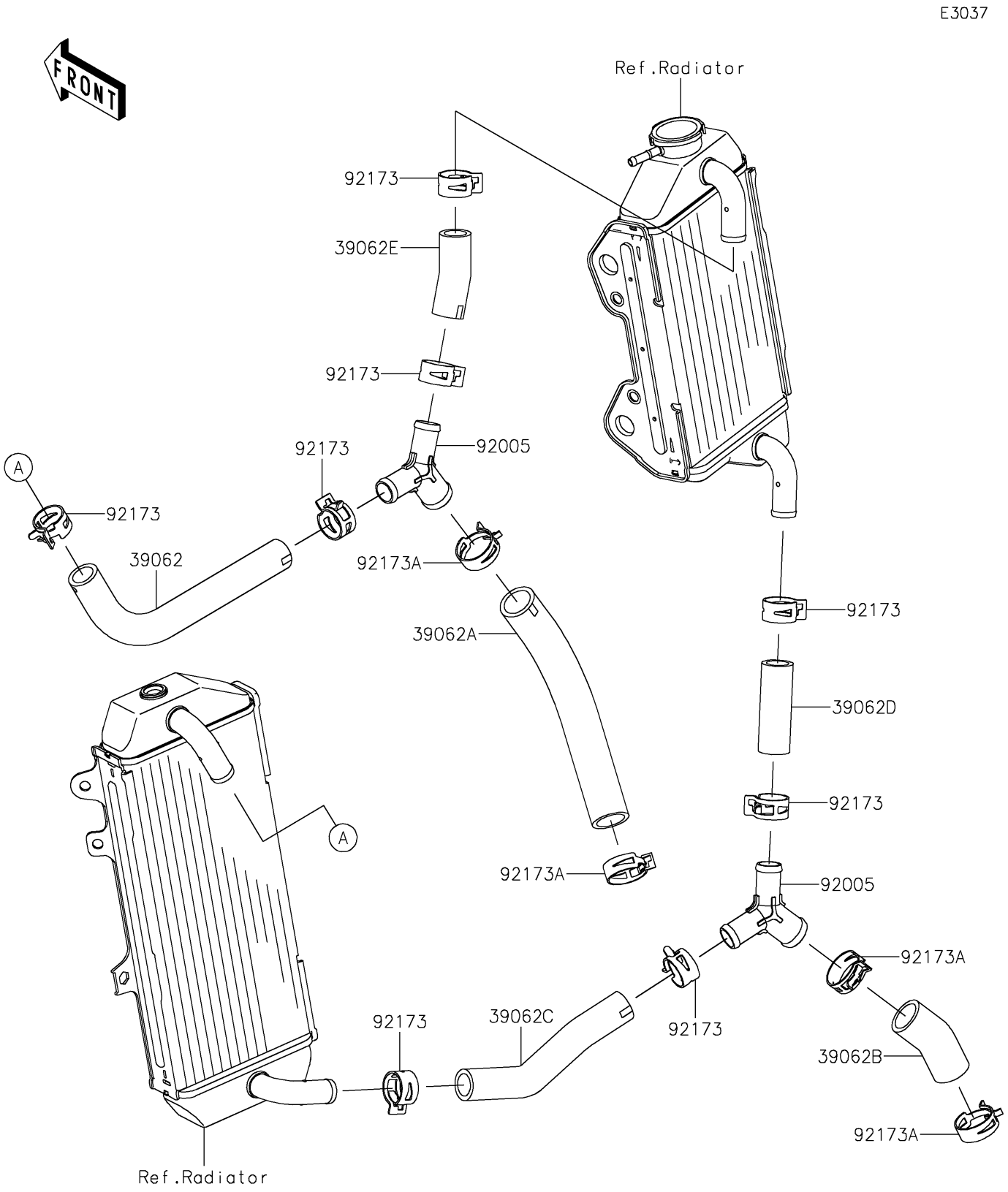

© 2026 Kawasaki Motors Corp., U.S.A.

2022 KX™450

PARTS LIST

Water Pipe

ITEM NAME	PART NUMBER	QUANTITY
HOSE-COOLING,RAD.LH UPP-FIT. (Ref # 39062)	39062-0707	1
HOSE-COOLING,FIT.-CYLINDER (Ref # 39062A)	39062-0805	1
HOSE-COOLING,FIT.-PUMP (Ref # 39062B)	39062-0806	1
HOSE-COOLING,FIT.-RAD.LH LWR (Ref # 39062C)	39062-0829	1
HOSE-COOLING,RAD.RH LWR-FIT. (Ref # 39062D)	39062-0841	1
HOSE-COOLING,RAD.RH UPP-FIT. (Ref # 39062E)	39062-0933	1
FITTING,3WAY (Ref # 92005)	92005-0902	2
CLAMP (Ref # 92173)	92173-1417	8
CLAMP (Ref # 92173A)	92173-1464	4

© 2026 Kawasaki Motors Corp., U.S.A.