2008 Vulcan® 2000

PARTS DIAGRAM

Headlight(s)

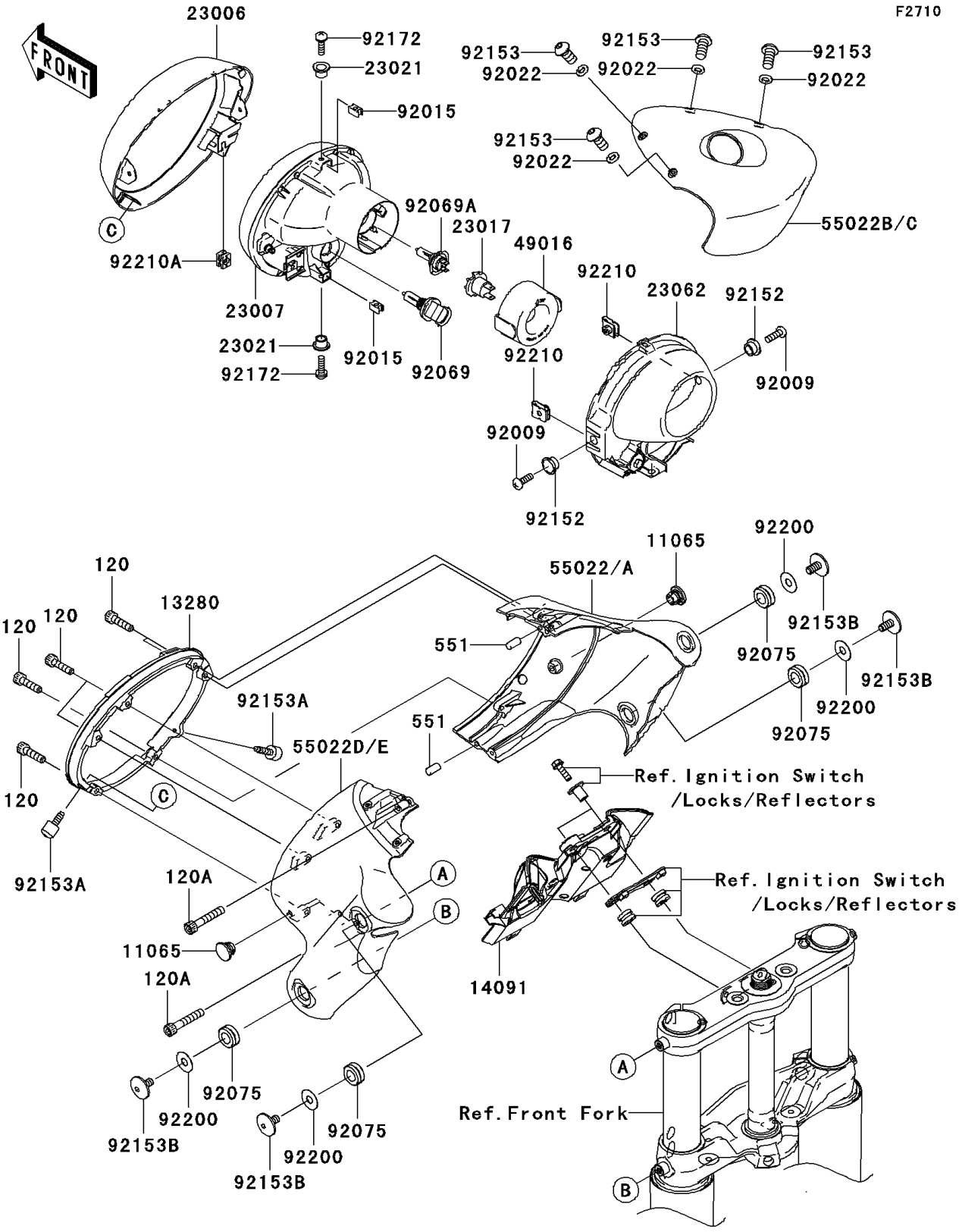

© 2026 Kawasaki Motors Corp., U.S.A.

2008 Vulcan® 2000

PARTS LIST

Headlight(s)

ITEM NAME	PART NUMBER	QUANTITY
BOLT-SOCKET,6X22 (Ref # 120)	120CB0622	6
BOLT-SOCKET,6X35 (Ref # 120A)	120CB0635	2
PIN-DOWEL,6X12 (Ref # 551)	551A0612	2
CAP (Ref # 11065)	11065-0054	2
HOLDER,HEAD LAMP (Ref # 13280)	13280-0021	1
COVER,HEAD LAMP (Ref # 14091)	14091-0241	1
RIM-LAMP (Ref # 23006)	23006-0003	1
LENS-COMP,HEAD LAMP (Ref # 23007)	23007-0028	1
SOCKET,HEAD LAMP (Ref # 23017)	23017-1067	1
WASHER (Ref # 23021)	23021-010	2
BRACKET-COMP,HEAD LAMP (Ref # 23062)	23062-0017	1
COVER-SEAL,SOCKET (Ref # 49016)	49016-1203	1
COVER-HEAD LAMP,RH,M.D,BLACK (Ref # 55022)	55022-0045-17K	1
COVER-HEAD LAMP,UPP,M.D,BLACK (Ref # 55022B)	55022-0046-17K	1
COVER-HEAD LAMP,LH,M.D,BLACK (Ref # 55022D)	55022-0047-17K	1
SCREW,5X16 (Ref # 92009)	92009-1879	2
NUT,5MM (Ref # 92015)	92015-1354	2
WASHER,6.2X11X1.5 (Ref # 92022)	92022-183	4
BULB,12V 65W,H9 (Ref # 92069)	92069-0007	1
BULB,12V 55W,H7 (Ref # 92069A)	92069-1126	1
DAMPER (Ref # 92075)	92075-104	4
COLLAR (Ref # 92152)	92152-0161	2
BOLT,SOCKET,6X16 (Ref # 92153)	92153-0404	4
BOLT,SOCKET,5X16 (Ref # 92153A)	92153-0624	2
BOLT,SOCKET,8X16 (Ref # 92153B)	92153-0709	4
SCREW,5X16 (Ref # 92172)	92172-0142	2
WASHER,8.8X23.5X0.5 (Ref # 92200)	92200-0136	4
NUT,5MM (Ref # 92210)	92210-0128	2
NUT (Ref # 92210A)	92210-0129	1

© 2026 Kawasaki Motors Corp., U.S.A.